2400SC & 2400SR
Owner's Manual Supplement

MAXUM®

Engine Serial Number: _____

Hull Identification Number:_____

Hull Identification Number

The Hull Identification Number (HIN) is located on the starboard side of the transom. Be sure to record the HIN (and the engine serial numbers) in the space provided above. Please refer to the HIN for any correspondence or orders.

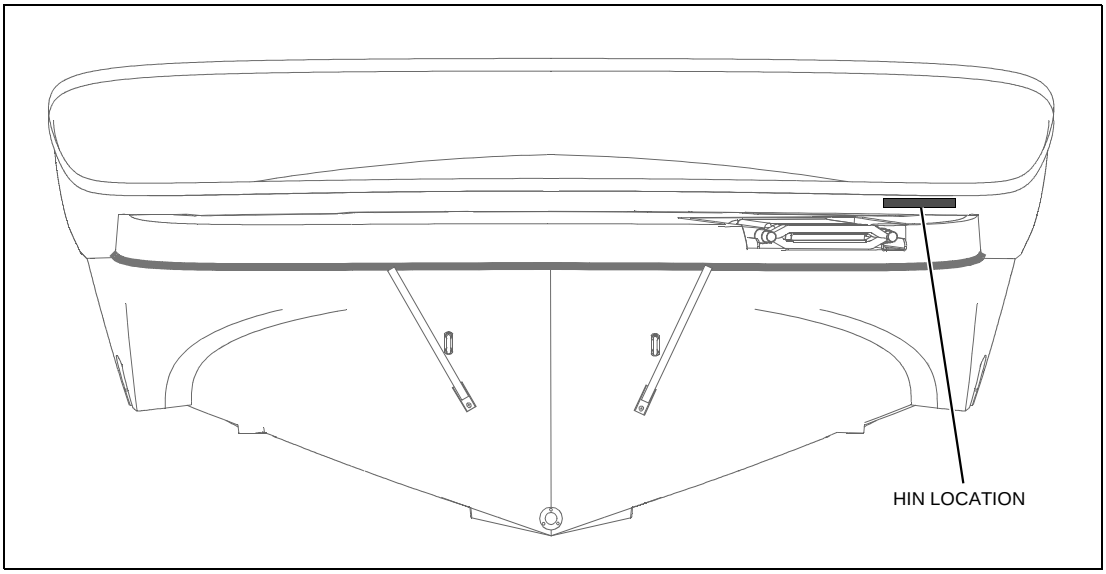

© 2003 Maxum Marine Technical Publications. All rights reserved.

No part of this publication may be reproduced, stored in any retrieval system, or transmitted in any form by any means, electronic, mechanical, photocopying, recording or otherwise, without prior written permission of Maxum. Printed in the U.S.A.

General Notes

The material in this document is for information only and is subject to change without notice. While reasonable efforts have been made in the preparation of this document to assure its accuracy, Maxum assumes no liability resulting from errors or omissions in this document, or from the use of information contained herein.

Due to our commitment to product improvement, Maxum reserves the right to make changes in the product design, specifications and equipment at any time without notice or obligation. Illustrations and/or photos may show optional equipment. All Maxum products meet or exceed USCG (Unites States Coast Guard) and/or NMMA (National Marine Manufacturer's Association) construction standards. Manufactured with 1,1,1 Trichloroethane, a substance which harms public health and environment during the manufacturing process by destroying ozone in the upper atmosphere.

Proprietary Rights

This document discloses subject matter in which Maxum has proprietary rights. The information and design disclosed herein were originated by and are the property of Maxum. Neither receipt nor possession thereof confers or transfers any right to reproduce, copy, alter or disclose the document or any part thereof, any information contained therein, or to construct boats or any item from it, except by written permission from or written agreement with Maxum. This document is to be returned upon request to Maxum.

CONTENTS

Chapter 1: Welcome Aboard!

1 Dealer Service

1 About Your Limited Warranty

1 Boating Experience

2 Safety Standards

2 Engine & Accessories Guidelines

2 Engine & Accessories Literature

3 Qualified Maintenance

3 Special Care For Moored Boats

4 Carbon Monoxide (CO)

4 Facts about CO
5 Where and How CO Can Accumulate
5 How to Protect Yourself and Others From CO
6 Trip Checklist
6 Monthly Checklist
6 Annual Checklist
6 Carbon Monoxide Alarm System (2400SC Only)
7 More Information

Chapter 2: Product Specifications

8 2400SC

9 2400SR

Chapter 3: Locations

10 Exterior Views

10 Hull Views
11 2400SC Deck Views
12 2400SR Deck Views

13 Component Locations

Chapter 4: Propulsion & Related Systems

15 Engine

15 Engine Room Ventilation System

16 Fuel System

17 Fuel Fill and Vent
17 Fuel Filters
17 Anti-siphon Valve

18 Quick Oil Drain System

Chapter 5: Controls

19 Steering

19 Shift/Throttle

19 Power Trim and Tilt

20 Gauges

20 Cleaning Gauges
20 Gauge Fogging
20 Radio Transmission Interference
20 Fuel Gauge

Chapter 6: Navigation & Communication Equipment

21 Compass

21 Depth Finder

Chapter 7: Plumbing

22 Bilge Pump

24 Autofloat Switches

24 Drain Systems

24 Deck Drains

25 Freshwater System

26 Portable Toilet (If Equipped)

26 Portable Toilet Pump-Out (If Equipped)

Chapter 8: Deck Equipment

27 Cleats and Tow Eyes

27 Ski Tow Ring

28 Canvas

28 Installing the Canvas Top (If Equipped)
29 Installing the Bimini Top (If Equipped)

Chapter 9: Appliances & Entertainment Systems

30 Alcohol Stove (2400SC Only, If Equipped)

30 Audio & Visual Equipment

Chapter 10: Convertible Seats, Beds, & Tables

31 Sleeper Seats (If Equipped)

31 Operating Positions
31 Lounge positions

32 2400SC Dinette to V-Berth Conversion

33 2400SR Bow Seating to Sunlounge Conversion

34 U-Lounge to Sunlounge Conversion (If Equipped)

Chapter 11: Lights

35 Care and Maintenance

35 Navigation Lights

Chapter 12: Electrical System

37 12-Volt DC System

37 Battery
37 Fuses and Circuit Breakers
37 Alternator
37 12-Volt Accessory Outlet
37 Battery Switch

38 Electrical Routings

38 2400SC Deck Electrical Harness
39 2400SR Deck Electrical Harness
40 Hull Electrical Harness

41 Wiring Diagram

Important Records

Float Plan

Hazard Boxes & Symbols

The hazard boxes and symbols shown below are used throughout this supplement to call attention to potentially dangerous situations which could lead to either personal injury or product damage. **Read ALL warnings carefully and follow all safety instructions.**

⚠ DANGER!

This box alerts you to immediate hazards which WILL cause severe personal injury or death if the warning is ignored.

⚠ WARNING!

This box alerts you to hazards or unsafe practices which COULD result in severe personal injury or death if the warning is ignored.

⚠ CAUTION

This box alerts you to hazards or unsafe practices which COULD result in minor personal injury or cause product or property damage if the warning is ignored.

NOTICE

This box calls attention to installation, operation or maintenance information, which is important to proper operation but is not hazard related.

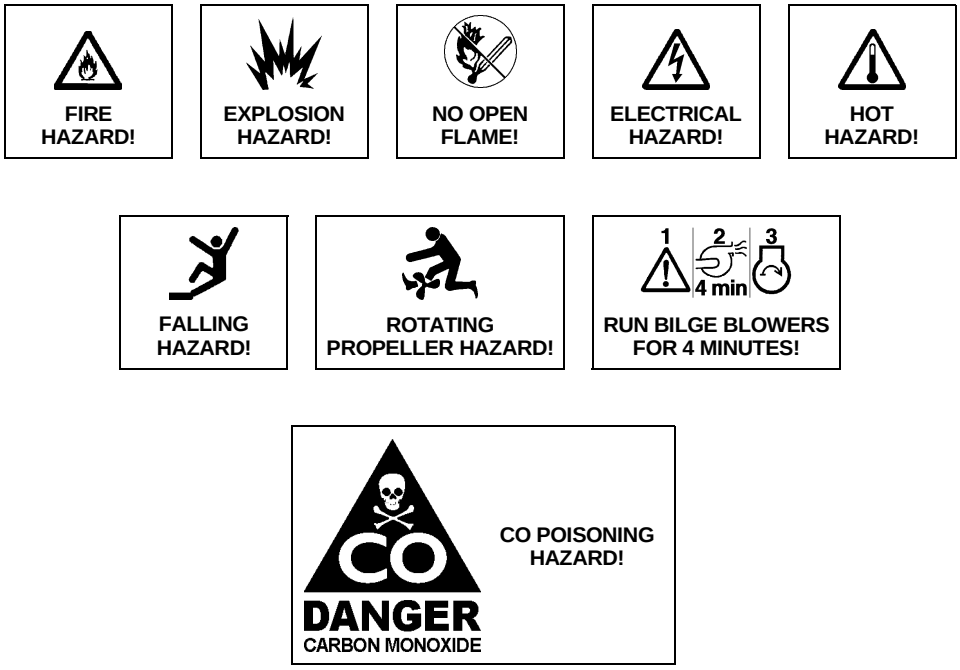

Chapter 1: Welcome Aboard!

This *Owner's Manual Supplement* provides specific information about your boat that is not covered in the *Sport Boat Owner's Manual*. Please study the *Sport Boat Owner's Manual* and this supplement carefully. Keep the *Sport Boat Owner's Manual* and this supplement on your boat in a secure, yet readily available place.

Dealer Service

- Ask your dealer to explain all systems before taking delivery of your boat.
- Your dealer is your key to service.
- Contact your dealer if you have any problems with your new boat.
- If your dealer cannot help, call our customer service hotline: 360-435-8957 or send us a FAX: 360-403-4235.
- Buy replacement parts from any authorized Maxum dealer.

About Your Limited Warranty

- Maxum offers a Limited Warranty on each new Maxum purchased through an authorized Maxum dealer.
- A copy of the Limited Warranty was included in your owner's packet.
- If you did not receive a copy of the Limited Warranty, please contact your dealer or call 360-435-8957 for a copy.

Boating Experience

WARNING!

***CONTROL HAZARD!* A qualified operator must be in control of the boat at all times. DO NOT operate your boat while under the influence of alcohol or drugs.**

If this is your first boat or if you are changing to a type of boat you are not familiar with, for your own comfort and safety, obtain handling and operating experience before assuming command of the boat.

Take one of the boating safety classes offered by the U.S. Power Squadrons or the U.S. Coast Guard Auxiliary. For more course information, including dates and locations of upcoming classes, contact the organizations directly:

- U.S. Power Squadrons: 1-888-FOR-USPS (1-888-367-8777) or on the Internet at: http://www.usps.org
- U.S. Coast Guard Auxiliary: 1-800-368-5647 or on the Internet at: http://www.cgaux.org

Outside the United States, your selling dealer, national sailing federation or local boat club can advise you of local sea schools or competent instructors.

Safety Standards

⚠ DANGER!

PERSONAL SAFETY HAZARD! **DO NOT allow anyone to ride on parts of the boat not designated for such use. Sitting on seat backs, lounging on the forward deck, bow riding, gunwale riding or occupying the transom platform while underway is especially hazardous and will cause personal injury or death.**

⚠ DANGER!

PERSONAL SAFETY HAZARD! **ALWAYS secure the anchor and other loose objects before getting underway. The anchor and other items that are not properly secured can come loose when the boat is moving and cause personal injury or death.**

- Your boat's mechanical and electrical systems were designed to meet safety standards in effect at the time it was built.
- Some of these standards were mandated by law, all of them were designed to insure your safety, and the safety of other people, vessels and property.

In addition to this **owner's manual supplement**, please read the ***Sport Boat Owner's Manual*** and all accessory instructions for important safety standards and hazard information.

Engine & Accessories Guidelines

NOTICE

When storing your boat please refer to your engine's operation and maintenance manuals.

- Your boat's engine and accessories were selected to provide optimum performance and service.
- Installing a different engine or other accessories may cause unwanted handling characteristics.
- Should you choose to install a different engine or to add accessories that will affect the boat's running trim, have an experienced marine technician perform a safety inspection and handling test before operating your boat again.

Certain modifications to your boat can result in cancellation of your warranty protection. Always check with your dealer before making any modifications to your boat.

Engine & Accessories Literature

- The engine and accessories installed on your boat come with their own operation and maintenance manuals.
- Read and understand these manuals before using the engine and accessories.
- Unless noted otherwise, all engine and accessory literature referred to in this supplement is included in your owner's packet.

Qualified Maintenance

⚠ WARNING!

To maintain the integrity and safety of your boat, allow only qualified personnel to perform maintenance on, or in any way modify: The steering system, propulsion system, engine control system, fuel system, environmental control system, electrical system or navigational system.

- Failure to maintain your boat's systems (listed in the warning above) as designed could violate the laws in your jurisdiction and could expose you and other people to the danger of bodily injury or accidental death.
- Follow the instructions provided in the *Sport Boat Owner's Manual*, this *Owner's Manual Supplement*, the engine owner's manual and all accessory instruction sheets and manuals.

Special Care For Moored Boats

NOTICE

- **To help seal the hull bottom and reduce the possibility of gelcoat blistering on moored boats, apply an epoxy barrier coating. The barrier coating should be covered with several coats of anti-fouling paint.**
- **Many states regulate the chemical content of bottom paints in order to meet environmental standards. Check with your local dealer about recommended bottom paints, and about the laws in effect in your area.**

- Whether moored in saltwater or freshwater, your boat will collect marine growth on its hull bottom.
- This will detract from the boat's beauty, greatly affect its performance and may damage the gelcoat.
- Periodically haul the boat out of the water and scrub the hull bottom with a bristle brush and a solution of soap and water.

Carbon Monoxide (CO)

⚠ DANGER!

- **Carbon monoxide gas (CO) is colorless, odorless, tasteless, and extremely dangerous.**
- **All engines, generators, and fuel burning appliances produce CO as exhaust.**
- **Prolonged exposure to low concentrations or very quick exposure to high concentrations will cause BRAIN DAMAGE or DEATH.**
- **Teak surfing, dragging, or water skiing within 20 feet of a moving water-craft can be fatal.**

Facts about CO

- CO poisoning causes a significant number of boating deaths each year.
- Called the "silent killer", CO is an extremely toxic, colorless, odorless and tasteless gas.
- CO can harm or even kill you inside or outside your boat.
- CO can affect you whether you’re underway, moored, or anchored.
- CO symptoms are similar to seasickness or alcohol intoxication.
- CO can make you sick in seconds. In high enough concentrations, even a few breaths can be fatal.
- Breathing CO blocks the ability of your blood to carry oxygen.
- The effects are cumulative, even low levels of exposure can result in injury or death.

Factors That Increase the Effects of CO Poisoning

- Age
- Smokers or people exposed to high concentrations of cigarette smoke
- Consumption of alcohol
- Lung disorders
- Heart problems
- Pregnancy

Where and How CO Can Accumulate

Stationary Conditions That Increase CO Accumulations Include:

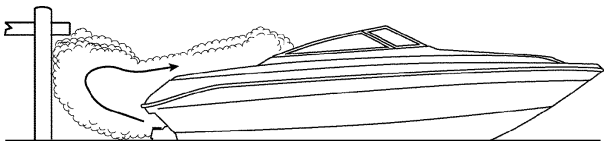

A. Using engine, generator, or other fuel burning device when boat is moored in a confined space.

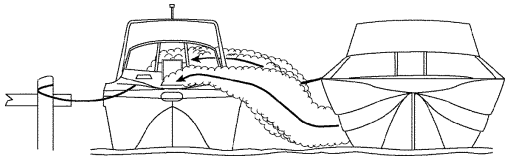

B. Mooring too close to another boat that is using its engine, generator, or other fuel burning device.

To correct stationary situations A and/or B:

- Close all windows, portlights and hatches.
- If possible, move your boat away from source of CO.

Running Conditions That Increase CO Accumulations Include:

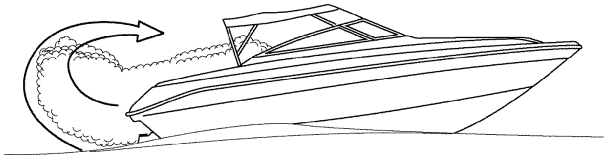

C. Running boat with trim angle of bow too high.

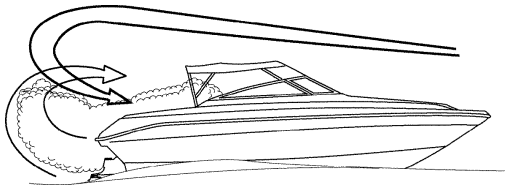

D. Running boat without through ventilation (station wagon effect).

To correct running situations C and/or D:

- Trim bow down.
- Open windows and canvas.
- When possible, run boat so that prevailing winds help dissipate exhaust.

How to Protect Yourself and Others From CO

- Know where and how CO may accumulate in and around your boat (see above).
- Maintain fresh air circulation throughout the boat at all times.
- Know where your engine and generator exhaust outlets are located and keep everyone away from these areas.
- Never sit on, or hang onto, the back deck or swim platform while the engine(s) are running.
- Never enter the areas under swim platforms where exhaust outlets are located.
- Although CO can be present without the smell of exhaust fumes, if exhaust fumes are detected on the boat, take immediate action to dissipate these fumes.
- Treat symptoms of seasickness as possible CO poisoning. Get the person into fresh air immediately. Seek medical attention—unless you’re sure it’s not CO.
- Install and maintain CO alarms inside your boat. Do not ignore any alarm. Replace alarms as recommended by the alarm manufacturer.
- Follow the checklists provided on the next page.
- Get a Vessel Safety Check.

For information on how to get a free VESSEL SAFETY CHECK, visit www.vesselsafetycheck.org or contact your local U.S. Coast Guard Auxiliary or United States Power Squadrons®.

- U.S. Coast Guard Auxiliary: 1-800-368-5647 or on the Internet at: http://www.cgaux.org
- U.S. Power Squadrons: 1-888-FOR-USPS (1-888-367-8777) or on the Internet at: http://www.usps.org

Trip Checklist

- ❏ Make sure you know where the exhaust outlets are located on your boat.
- ❏ Educate all passengers about the symptoms of CO poisoning and where CO may accumulate.
- ❏ When docked, or rafted with another boat, be aware of exhaust emissions from the other boat.
- ❏ Confirm that water flows from the exhaust outlet when the engines and generator are started.
- ❏ Listen for any change in exhaust sound, which could indicate an exhaust component failure.
- ❏ Test the operation of each CO alarm by pressing the test button.

Monthly Checklist

- ❏ Make sure all exhaust clamps are in place and secure.
- ❏ Look for exhaust leaking from exhaust system components. Signs include rust and/or black streaking, water leaks, or corroded or cracked fittings.
- ❏ Inspect rubber exhaust hoses for burned, cracked, or deteriorated sections. All rubber hoses should be pliable and free of kinks.

Annual Checklist

Have a Qualified Marine Technician:

- ❏ Replace exhaust hoses if cracking, charring, or deterioration is found.
- ❏ Ensure that your engines and generators are properly tuned, and well maintained.
- ❏ Inspect each water pump impeller and the water pump housing. Replace if worn. Make sure cooling systems are in working condition.
- ❏ Inspect all metallic exhaust components for cracking, rusting, leaking, or loosening. Make sure they check the cylinder head gasket, exhaust manifold, water injection elbow, and the threaded adapter nipple between the manifold and the elbow.
- ❏ Clean, inspect, and confirm proper operation of the generator cooling water anti-siphon valve (if equipped).

Carbon Monoxide Alarm System (2400SC Only)

⚠ DANGER!

CARBON MONOXIDE POISONING HAZARD!

- **The house battery switch must be in the "ON" position for the CO Monitors to work.**

NOTICE

The stereo memory and CO monitor(s) place a small, but constant drain on the battery. If your boat will be unattended for an extended amount of time, plug into shore power with the battery charger turned on, or disconnect the battery if shore power is not an option.

- ***Do not disconnect the alarm system.***
- Read and understand the manufacturer's instructions for your CO alarm system. If you did not receive an instruction manual, call (800) 383-0269 and one will be mailed to you.

If your boat is not equipped with a carbon monoxide alarm, consider purchasing one from your dealer or marine supply store.

More Information

For more information about how you can prevent carbon monoxide poisoning on recreational boats and other ways to boat more safely, contact:

United States Coast Guard
Office of Boating Safety (G-OPB-3)
2100 Second Street SW
Washington, DC 20593
www.uscgboating.org
1-800-368-5647

National Marine Manufacturers Association (NMMA)
200 East Randolph Drive
Suite 5100
Chicago, IL 60601-9301
www.nmma.org
312-946-6200

American Boat & Yacht Council, Inc. (ABYC)
3069 Solomon's Island Road
Edgewater, MD 21037-1416
www.abycinc.org
410-956-1050

For information on how to get a free VESSEL SAFETY CHECK, visit www.vesselsafetycheck.org or contact your local U.S. Coast Guard Auxiliary or United States Power Squadrons®.

- U.S. Coast Guard Auxiliary: 1-800-368-5647 or on the Internet at: http://www.cgaux.org
- U.S. Power Squadrons: 1-888-FOR-USPS (1-888-367-8777) or on the Internet at: http://www.usps.org

Chapter 2: Product Specifications

2400SC

STANDARD SEATING

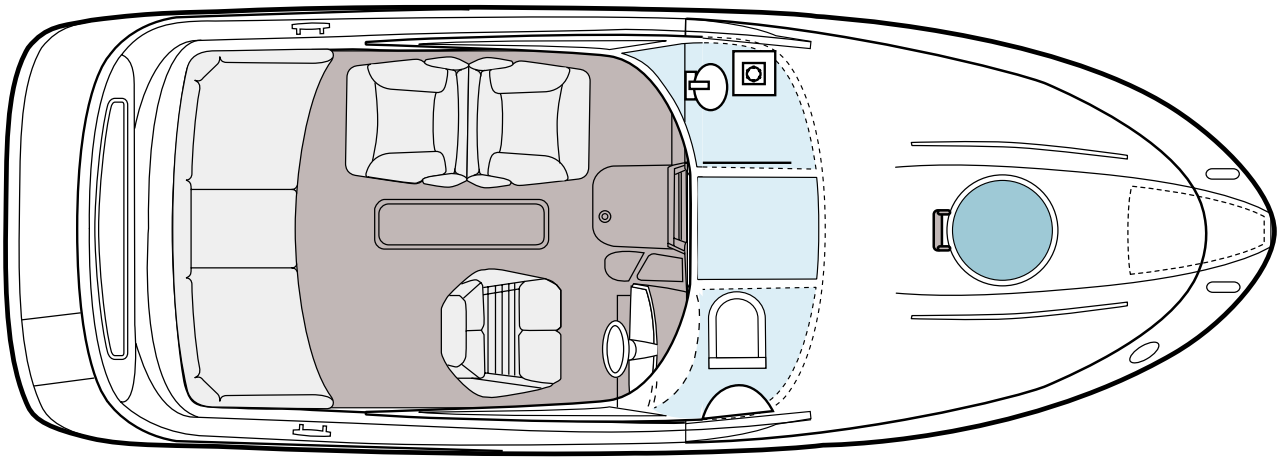

SPORT SEATING

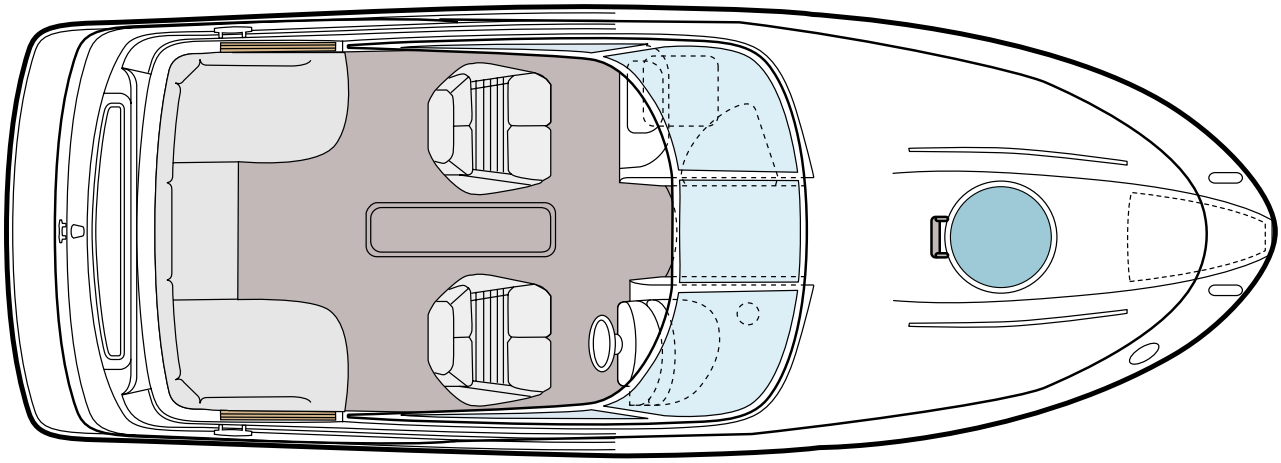

Overall Length	Bridge Clearance	Beam	Draft (Drive Up)	Draft (Drive Down)	Fuel Capacity (gal.)	Freshwater Capacity (gal.)
23' 11"	5' 3"	8' 6"	1' 8"	3' 0"	70	10

2400SR

STANDARD SEATING

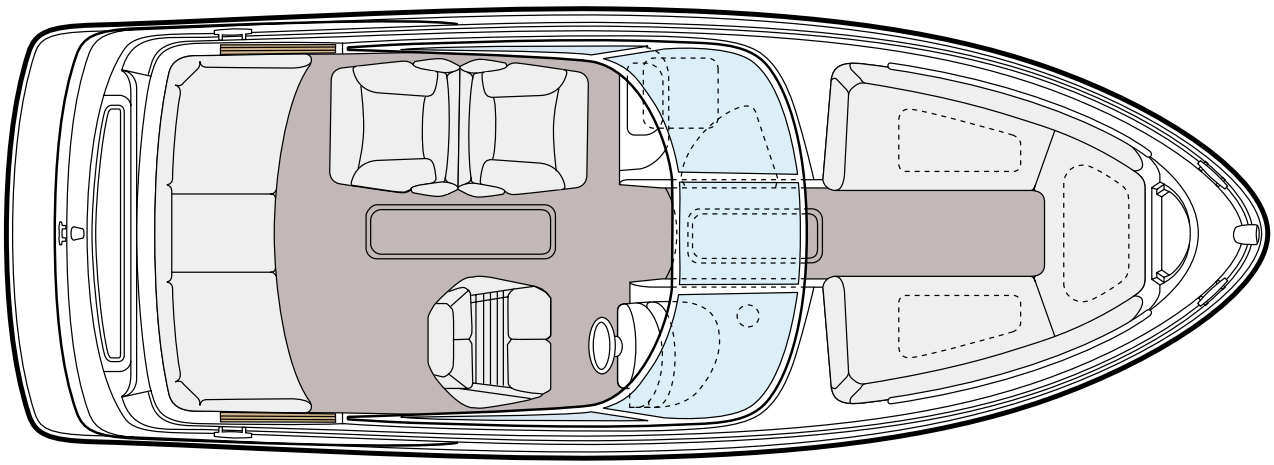

SPORT SEATING

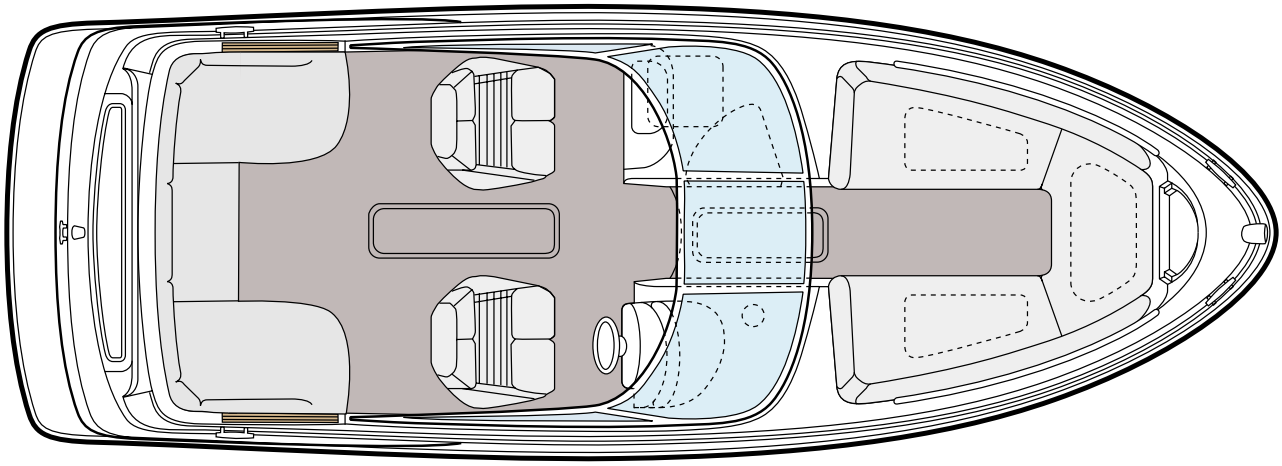

Overall Length	Bridge Clearance	Beam	Draft (Drive Up)	Draft (Drive Down)	Fuel Capacity (gal.)	Freshwater Capacity (gal.)
23' 11"	5' 3"	8' 6"	1' 8"	3' 0"	70	10

Chapter 3: Locations

Exterior Views

Hull Views

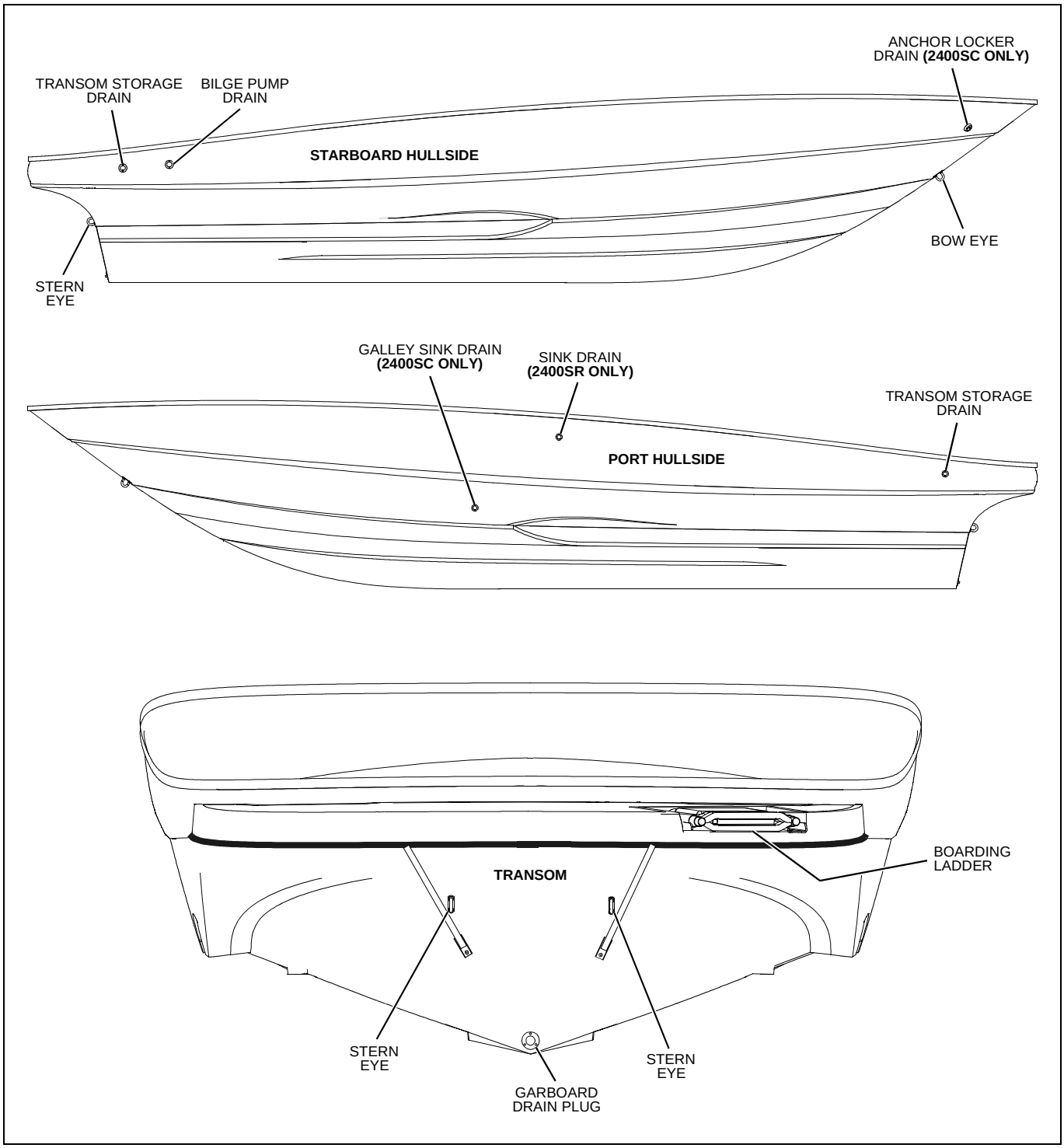

2400SC Deck Views

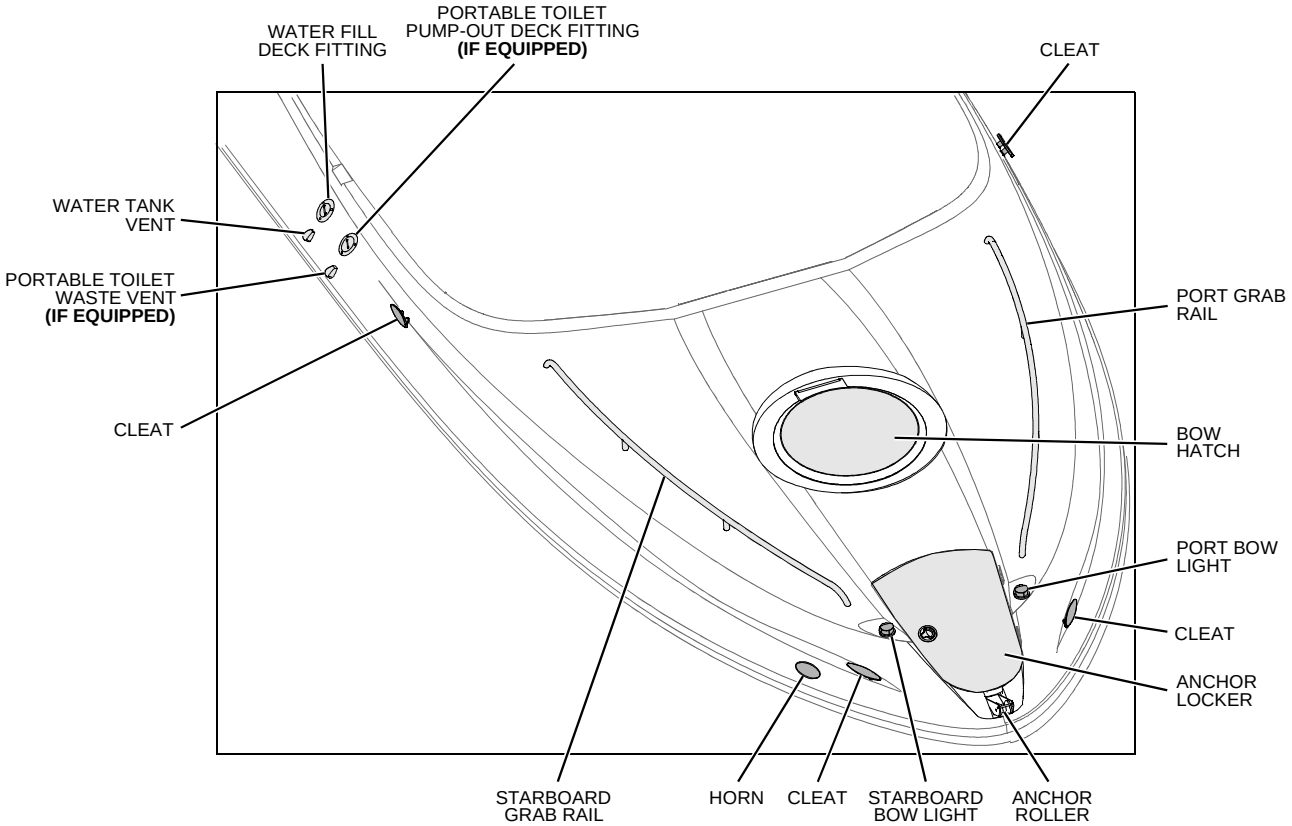

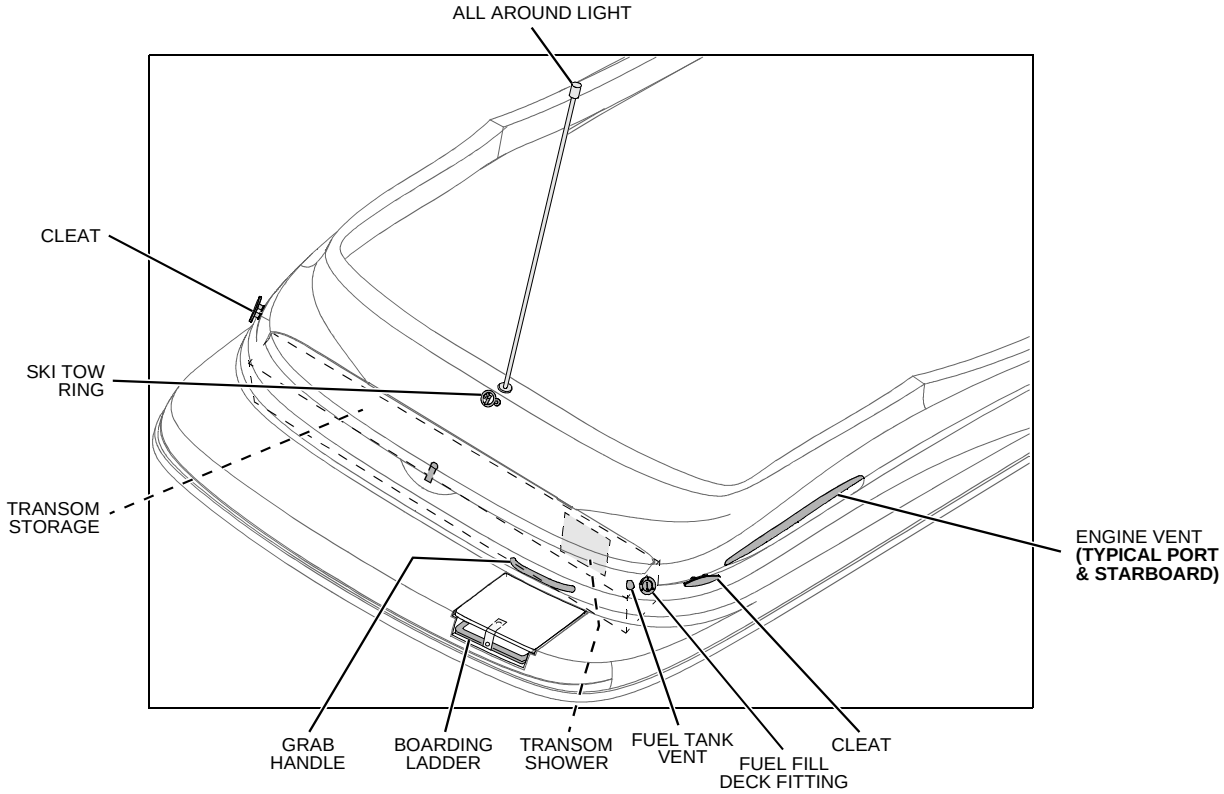

2400SR Deck Views

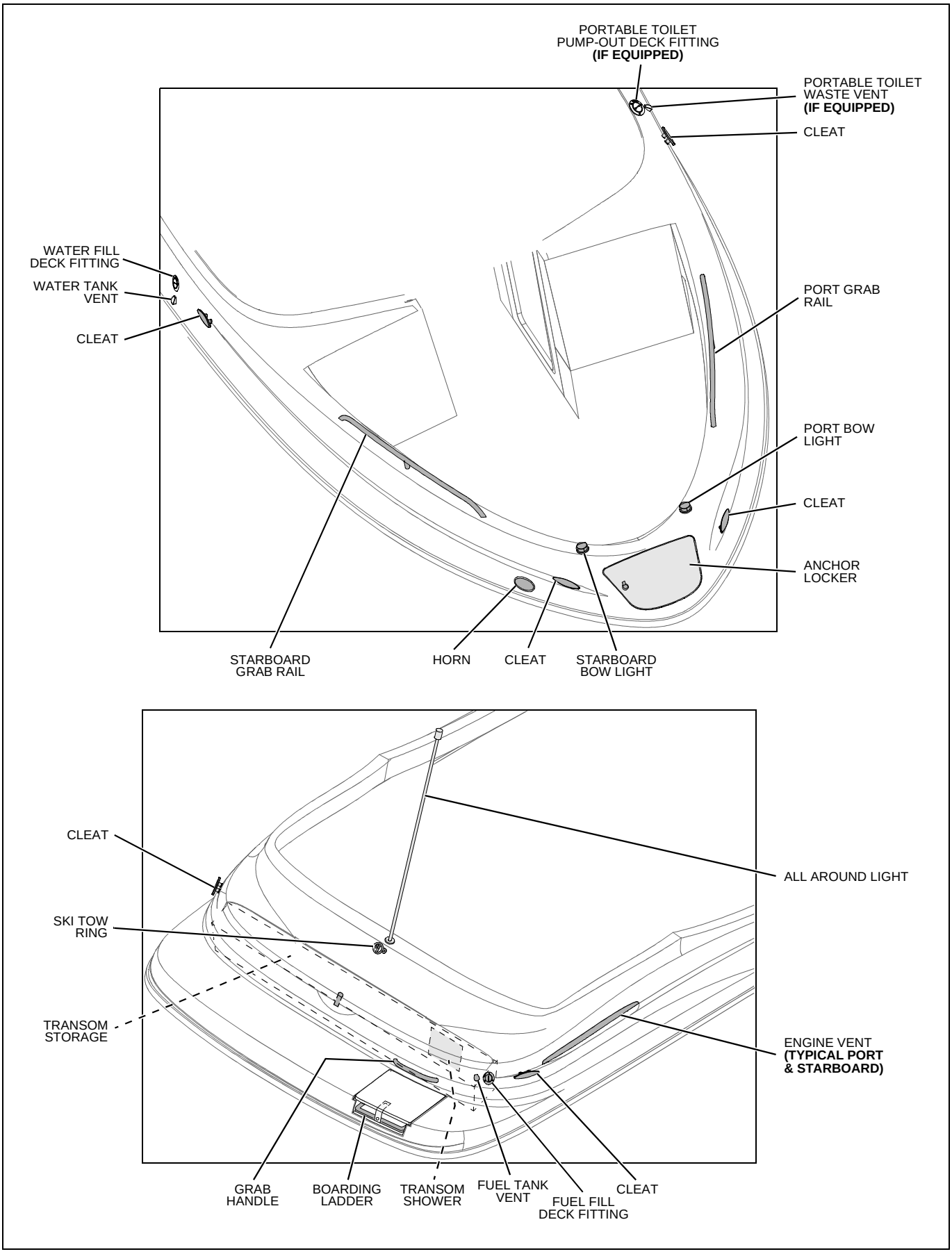

Component Locations

12-Volt Accessory Outlet: At the helm on the dash panel.

Battery: Access is through the port transom hatch. Access the hatch by removing the port transom cushion and lifting the canvas storage cover.

Battery Switch: Access is through the port transom hatch. Access the hatch by removing the port transom cushion and lifting the canvas storage cover.

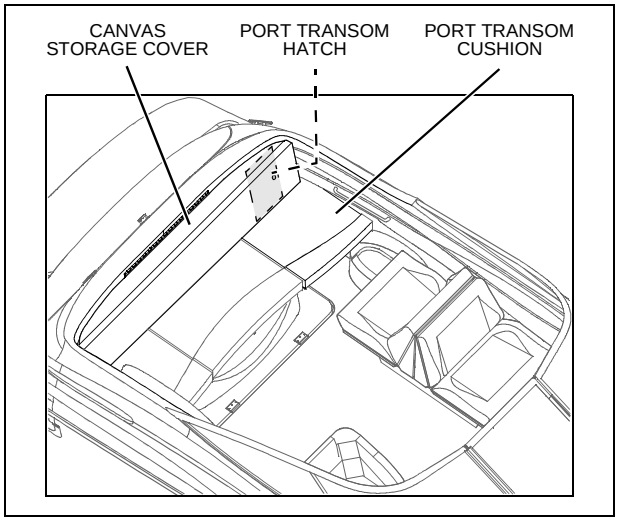

Bilge pump: In the engine compartment (for system details refer to the Bilge Pump section of Chapter 6: Plumbing).

CO Monitor (2400SC Only): On the ceiling inside the cabin.

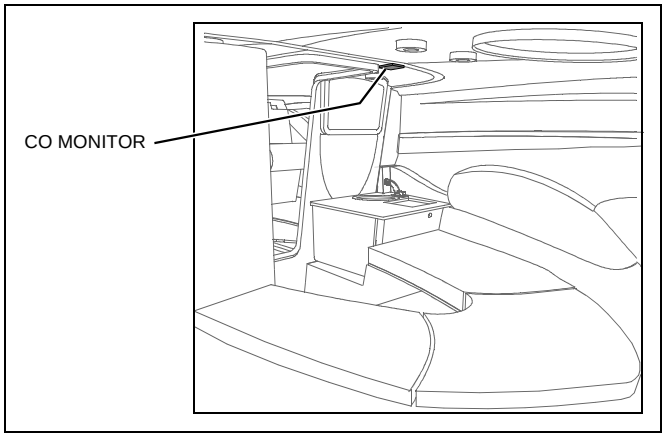

Depth Sounder Transducer: In the engine compartment bilge.

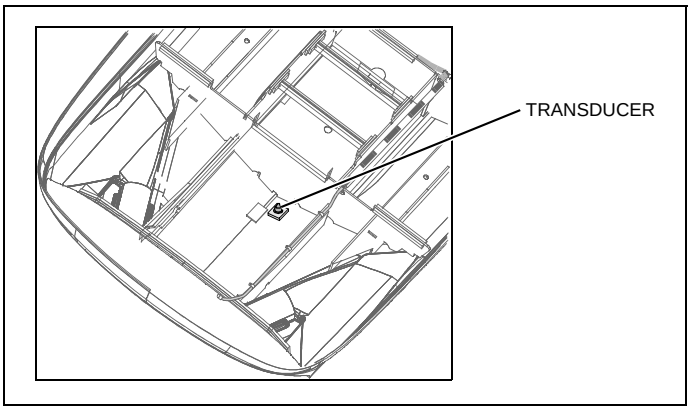

Engine Circuit Breaker: On the engine (refer to the Engine Owner's Manual).

Fuel Fill Deck Fitting: On the starboard aft corner of the deck (refer to pages 9 & 10 for location views).

Fuel Tank: In the engine compartment, forward of the engine (refer to page 13 for location view).

Navigation Lights: Red and green lights at the bow (refer to pages 9 & 10 for location views). White all-around light on the stern (refer to pages 9 & 10 for location views).

Portable Toilet Pump-out Deck Fitting (If Equipped):
- **2400SR:** On the port side deck (refer to page 9 for location view).
- **2400SC:** On the starboard side deck (refer to page 10 for location view).

Water Fill Deck Fitting: On the starboard side deck (refer to pages 9 & 10 for location views).

Water Pump Switch:
- **2400SR:** On the aft wall in the starboard storage compartment.

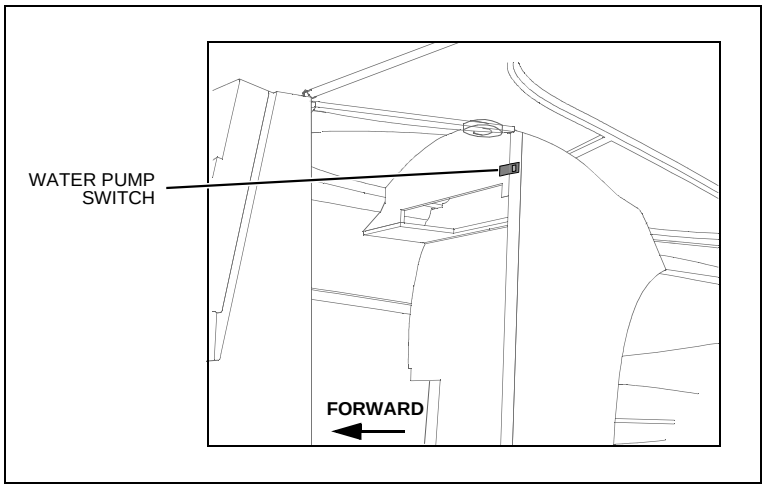

- **2400SC:** In the head compartment, on the aft wall.

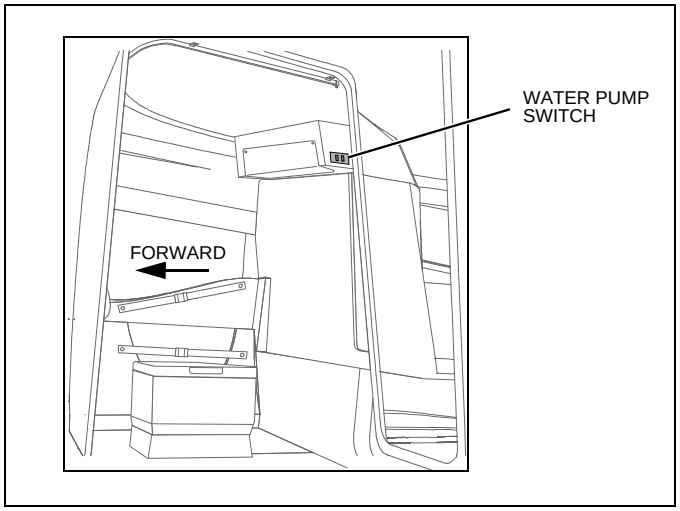

Water Tank: Access is through the deck plate inside the ski locker.

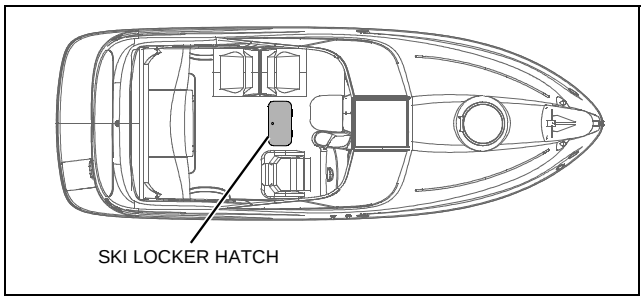

Chapter 4: Propulsion & Related Systems

Engine

Be sure to read and understand the engine operation and maintenance manuals before starting or doing any maintenance on the engine.

Engine Room Ventilation System

WARNING!

FIRE/EXPLOSION HAZARD

- **Use of the blower system is NOT A GUARANTEE that explosive fumes have been removed.**
- **If you smell fuel, DO NOT start the engine and DO NOT turn on any electrical devices.**
- **If you smell fuel and the engine is already running, SHUT OFF the engine and TURN OFF all electrical devices. Investigate immediately.**
- **DO NOT obstruct or modify the ventilation system.**

- The bilge blower removes explosive fuel fumes from the engine compartment.
- Fresh air is drawn into the compartment through the deck vents.
- The blower switch is at the helm.

To make sure the engine compartment is ventilated with fresh air, run the bilge blower:

- For at least four minutes before starting the engine.
- During starting.
- Anytime your boat is running below cruising speed.

BILGE BLOWER SYSTEM

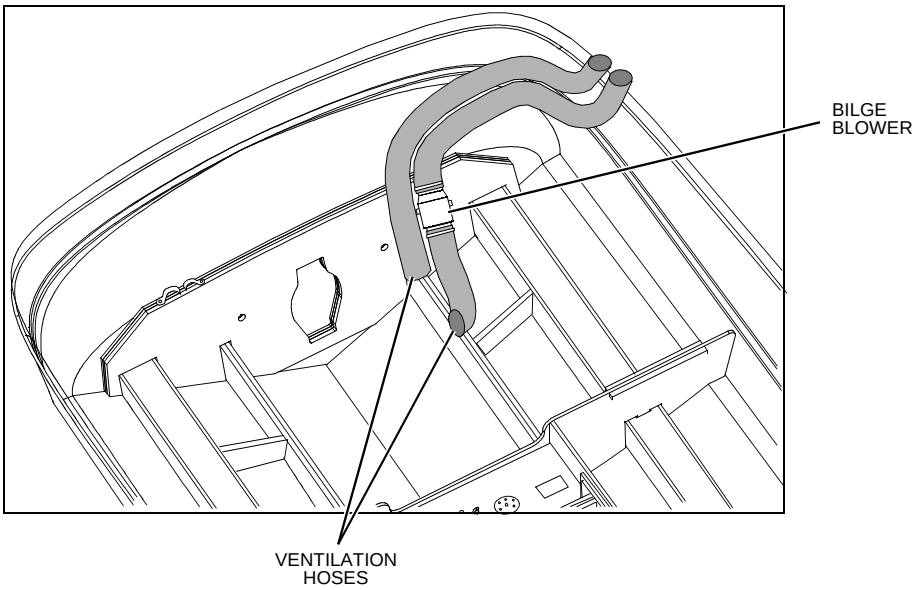

Fuel System

WARNING!

FIRE, EXPLOSION AND OPEN FLAME HAZARD!

- **It is very important that the fuel system be inspected thoroughly the first time it is filled and at each subsequent filling.**
- **The fueling instructions in the *Sport Boat Owner's Manual* and the fuel recommendations in the engine operation manual *must* be followed.**

CAUTION

Avoid the storage or handling of gear near the fuel lines, fittings and tank.

FUEL SYSTEM ROUTING

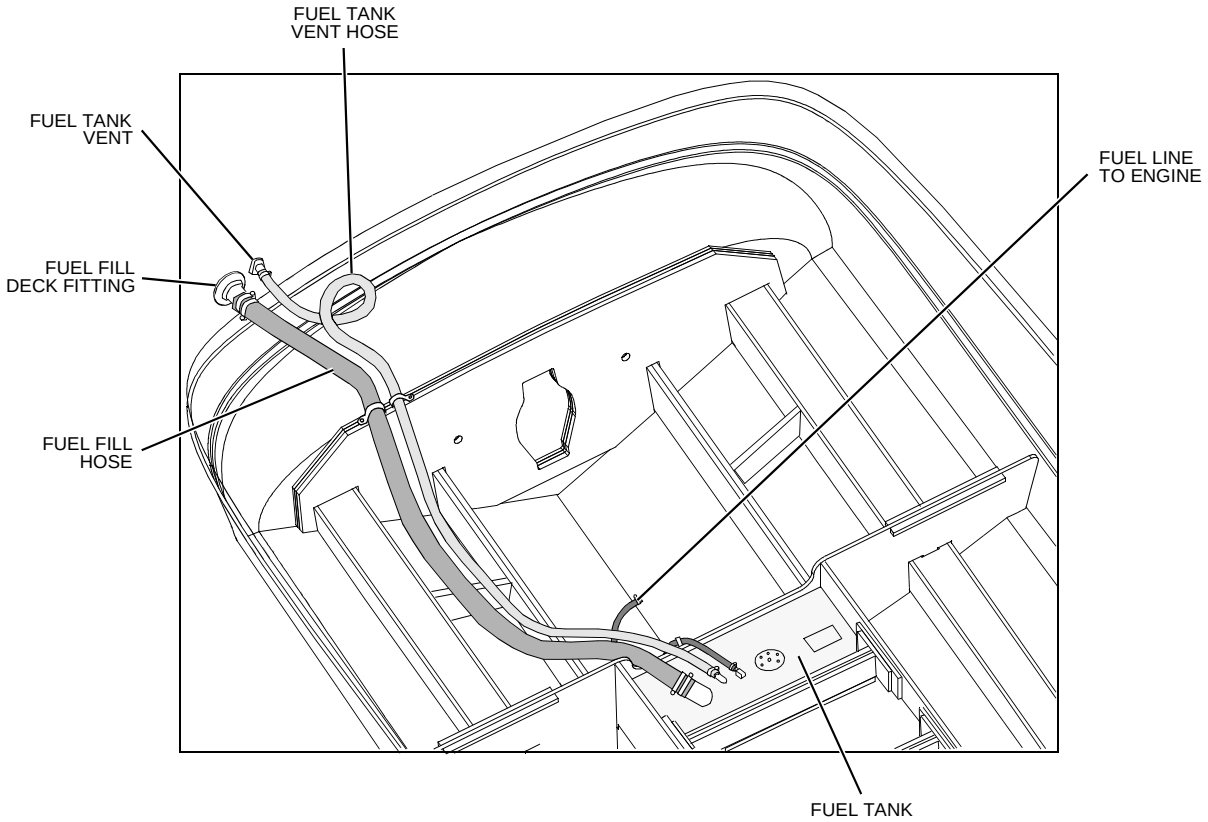

Fuel Fill and Vent

- The fuel fill fitting is marked “GAS”.
- The fuel tank vent is located next to the fuel fill.
- If you experience difficulty filling the fuel tank, check to see if the fuel fill hose or vent hose is kinked or collapsed. If there are no visible signs of a problem, contact your local dealer.

Fuel Filters

- The fuel pickup tube (located inside the fuel tank) is equipped with a fine mesh screen filter.
- In addition, when supplied by the engine manufacturer, a fuel filter is installed on the engine.
- Periodically replace the fuel filters to make sure they remain clean and free of debris.
- Consult with your selling dealer or local marina concerning fuel additives that help to prevent fungus or other buildup in your fuel tank.

Anti-siphon Valve

NOTICE

- **If an engine running problem is diagnosed as fuel starvation, check the anti-siphon valve. If the valve is stuck or clogged, change or replace it while the engine is shut down.**
- **NEVER run the engine with the anti-siphon valve removed, except in an emergency.**

- The fuel system is equipped with an anti-siphon valve.
- The valve is located at the point where the fuel feed line attaches to the fuel tank.
- The valve is spring loaded and is opened by fuel pump vacuum.
- This valve will prevent fuel from siphoning from the tank in the event of a fuel line rupture.

Quick Oil Drain System

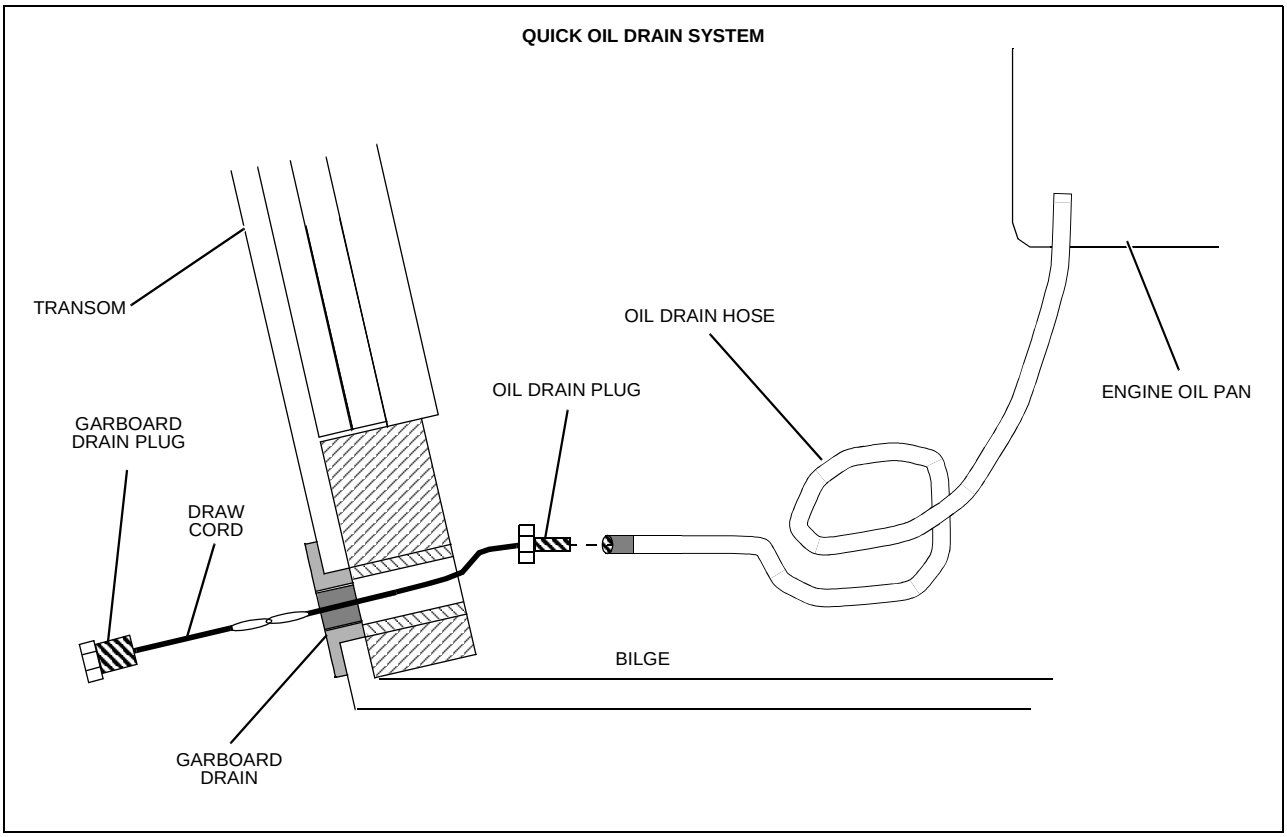

To drain the engine oil:

1. Remove the boat from the water.
2. Unscrew the garboard drain plug.
3. Pull the draw cord until the oil drain plug and the oil drain hose slide out of the garboard drain.
4. Place the end of the oil drain hose into a suitable container.
5. Unscrew the oil drain plug and drain the engine oil.
6. Replace the oil drain plug.
7. Push the drain hose back into the bilge.
8. Replace the garboard drain plug.

Always dispose of waste oil in accordance with local regulations.

Chapter 5: Controls

Steering

- This boat features a power assisted rack-and-pinion steering system.
- Check the fluid level in the power steering reservoir *every time you use your boat*.
- Boat steering is not self-centering.

Shift/Throttle

WARNING!

LOSS OF CONTROL HAZARD!

Improper maintenance of shift/throttle hardware may cause a sudden loss of control!

- Carefully read and understand all of the information about the shift/throttle in the *Sport Boat Owner's Manual*.
- Also, read and understand the shifter/throttle and engine manuals.

Power Trim and Tilt

- The stern drive on your boat is equipped with power trim and tilt.
- Trim and tilt instructions are provided in the engine operation manual and the shifter/throttle manual.

Gauges

Cleaning Gauges

CAUTION!

PRODUCT or PROPERTY DAMAGE HAZARD!

- **Use only mild soap and water to clean the gauge lenses and bezels.**
- **Use of other cleaners, including common window cleaning solutions, may cause the lenses to crack.**
- **Lenses cracked in this manner will not be covered by our warranty.**

Gauge Fogging

- Moisture may occasionally find its way into the gauges causing lens fogging.
- Turning on the gauge lights will help dry the lenses.
- Fogging will not harm the gauges.

Radio Transmission Interference

VHF or other radio transmissions may cause brief erratic readings on the tachometer. This will not damage this gauge or affect its accuracy when not transmitting.

Fuel Gauge

It is normal for the pointer on your fuel gauge to bounce as fuel sloshes back and forth in the fuel tank.

Chapter 6: Navigation & Communication Equipment

Thoroughly read and understand the navigation and communication manuals before using these systems for the first time and observe the following:

Compass

NOTICE

Compass accuracy can be affected by many factors. Have a qualified technician calibrate your compass. Make sure the technician gives you a deviation card which shows the corrections to apply in navigational calculations. Keep a copy of the deviation card at each helm.

Depth Finder

⚠ WARNING!

- **DO NOT use the depth finder as a navigational aid to prevent collision, grounding, boat damage or personal injury.**
- **When the boat is moving, submerged objects will not be seen until they are already under the boat.**
- **Bottom depths may change too quickly to allow time for the boat to react.**
- **If you suspect shallow water or submerged objects, run the boat at very slow speeds.**

Chapter 7: Plumbing

Bilge Pump

NOTICE

Discharge of oil, oil waste or fuel into navigable waters is prohibited by law. Violators are subject to legal action by the local authorities.

- Your boat is equipped with a bilge pump for pumping water out of the bilge.
- The bilge pump is controlled by an automatic bilge pump float switch (autofloat switch) and/or a switch at the helm.

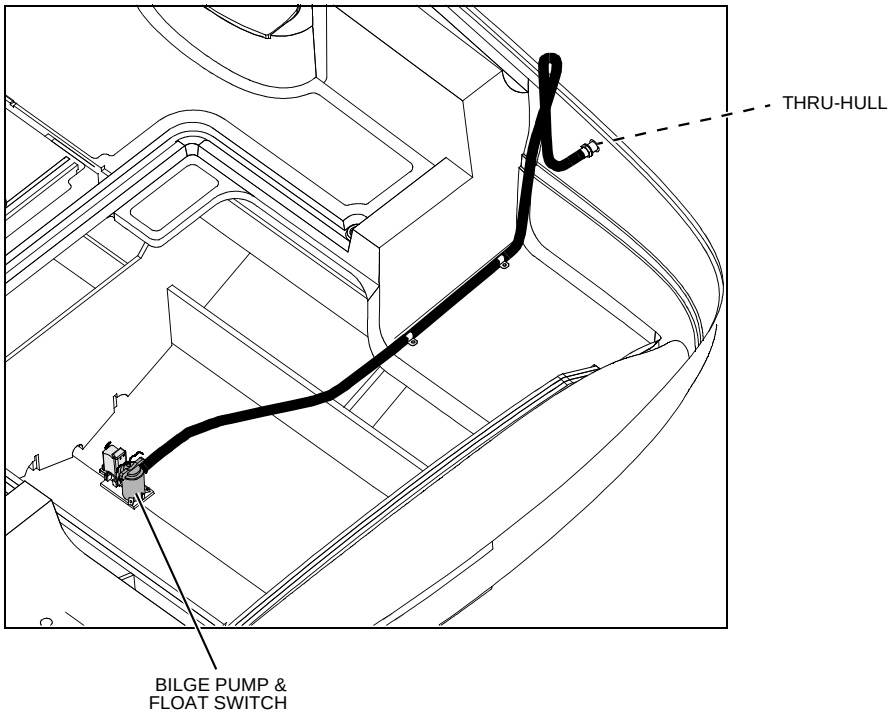

Bilge Pump Testing

- The bilge pump is critical to the safety of your boat.
- As follows, test the bilge pump often to make sure it is working.

1. Turn on the bilge pump switch at the helm.
2. Any water in the bilge should pump overboard.

- If the pump motor is running but not pumping, inspect the discharge hose for a kink or collapsed area.
- If no problems are found, check the bilge pump housing for clogging debris as follows:

1. Remove the power cartridge:
   a. Lift the tab while rotating the fins counter-clockwise.
   b. Lift out the power cartridge.
   c. Clear the outer housing of debris.
2. Reinstall the power cartridge:
   a. Make sure the “O” ring is properly seated.
   b. Coat the “O” ring with a light film of vegetable or mineral oil.
   c. Align the cams on either side of the power cartridge with the two slots on the outer housing.
   d. Press the power cartridge into the housing while twisting clockwise.
3. Check the reinstallation by trying to twist the fins counter-clockwise without lifting the tab; the cartridge should stay in place.

BILGE PUMP COMPONENTS

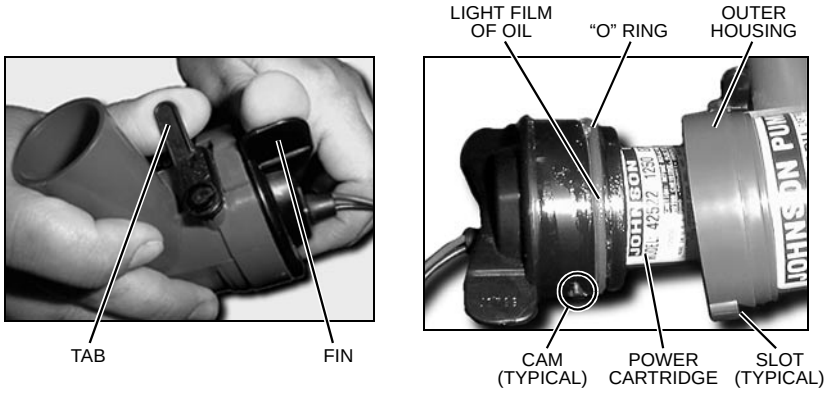

Autofloat Switches

- The automatic bilge pump uses electromagnetic an float switch (autofloat) to turn on the pump whenever water rises above a preset level in the bilge.
- The autofloat switch is mounted next to each automatic bilge pump.
- The autofloat switch is wired directly to the battery and will normally function even when the boat is completely shut down and left unattended.

Test the autofloat switch often as follows:

1. Push the float switch test button ***up*** to turn on the bilge pump.
   - If the pump does not turn on, check the inline fuse.
   - If the fuse is good but the switch still doesn't work, it may mean the switch is bad or possibly the battery is low.
2. Push test button all the way ***down*** to return the float switch to auto mode.

FLOAT SWITCH TESTING

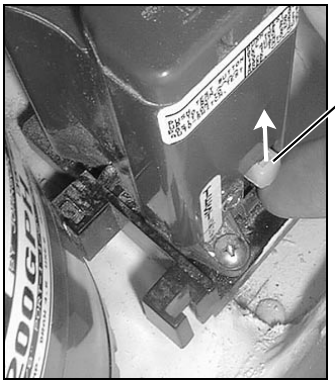

LIFT SWITCH UP
BILGE PUMP SHOULD TURN ON

PUSH SWITCH DOWN
BILGE PUMP SHOULD TURN OFF

⚠ CAUTION!

When the test is completed on each float switch, you MUST push the test button *all the way down* to the auto position to return the switch to auto mode!

Drain Systems

Deck Drains

- Water on the deck is drained overboard through the deck drains.
- Keep the deck drains free of debris.

Freshwater System

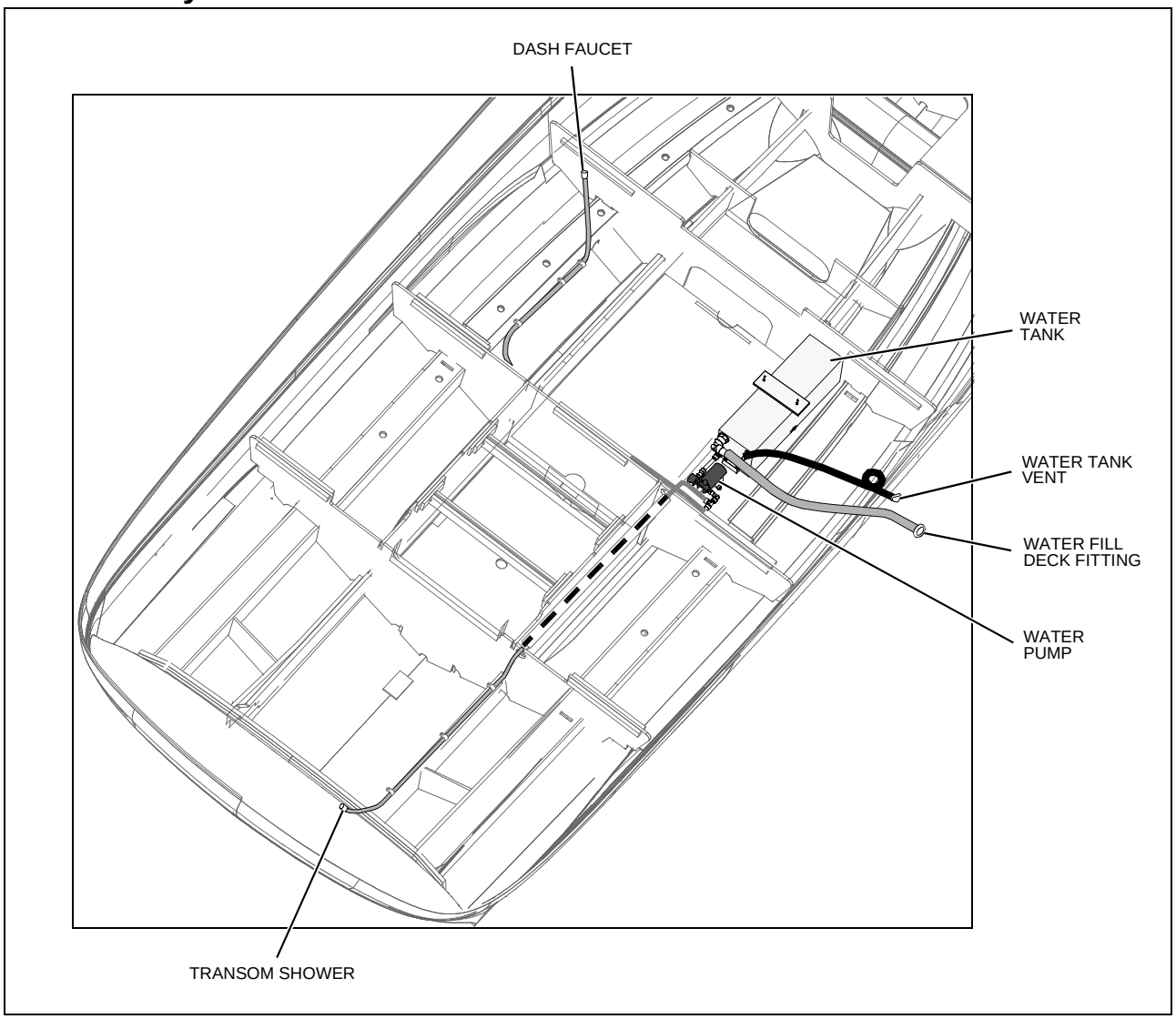

- Your boat may be equipped with a pressure type (demand) freshwater (potable) system.
- This system can be pressurized by turning on the water pump (See the *Component Locations* section of this *Supplement* for the location of the water pump switch).
- Turn ***off*** the water pump when the water tank is empty or when the boat is not in use.
- Inspect and clean the water filter often (located on the water pump).
- When your boat is to be left unattended for long periods of time, pump the water tank dry to prevent stored water from becoming stagnant and distasteful.
- If the freshwater system needs to be disinfected, ask your dealer about treatments available for your boat's system.

Winterizing the Freshwater System

1. Pump the water tank dry.
2. Drain the system lines by opening the water filter.

Portable Toilet (If Equipped)

NOTICE

Check with local authorities for regulations regarding the legal use of marine head systems.

- Your boat may feature a portable toilet.
- Read and follow the manufacturer's operating instructions before using your portable toilet.

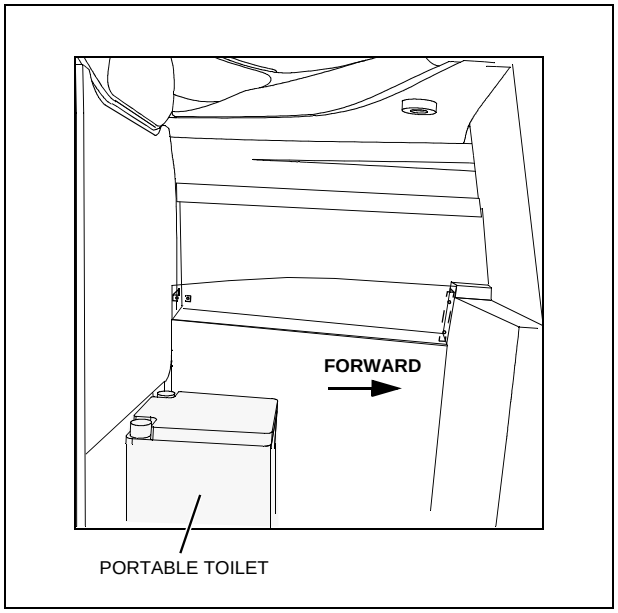

Portable Toilet Pump-Out (If Equipped)

- Your boat may feature a portable toilet pump-out.
- Read and follow the manufacturer's operating instructions before using this feature.

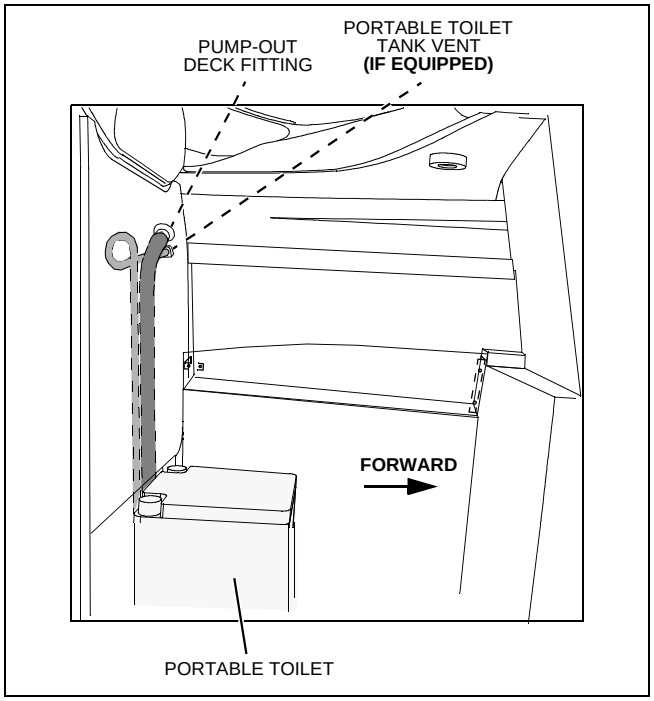

Chapter 8: Deck Equipment

Cleats and Tow Eyes

⚠ WARNING!

PERSONAL INJURY and /or PRODUCT or PROPERTY DAMAGE HAZARD!

- **NEVER lift the boat using the bow and stern eyes or the cleats.**

Carefully read the section on towing in the *Sport Boat Owner's Manual* before:

- Towing anything behind the boat.
- Being towed by another vessel.

Ski Tow Ring

⚠ WARNING!

PERSONAL INJURY and /or PRODUCT or PROPERTY DAMAGE HAZARD!

Failure to follow these guidelines can result in injury or death:

- **Only tow water skis, wakeboards, or recreational towables.**
- **Do not tow parasails, kites, or other boats.**
- **Do not tow more than two persons at one time.**
- **Use caution with skier in tow as tow rope may snap back into cockpit when released.**

Your boat may feature a ski tow ring. Attach tow rope as shown in the photo.

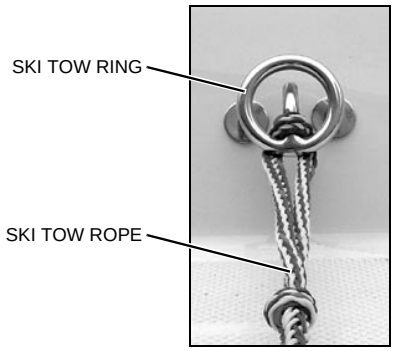

Canvas

⚠ CAUTION!

PRODUCT or PROPERTY DAMAGE HAZARD!

- **Bimini tops are not designed to withstand speeds over 45 MPH.**
- **Take down and securely stow the canvas top before transporting your boat by road.**

Installing the Canvas Top (If Equipped)

1. Slide the swivel ends (A) of the main bow (B) over the pre-drilled hole on each side windshield frame (C) and secure with the pins (D).
2. Unfold the canvas top and align and snap the front edge of the top (E) to the windshield frame.
3. Close the front zipper (F).
4. Pull aft on the aft edge of the top (G), making sure the canvas lies evenly from side to side.
5. Hook the hold down straps (H) to the deck loops (I).
6. Align the secondary bow (J) with the center seam of the canvas by loosening or tightening the top straps (K).
7. If the canvas top does not have a smooth, taut look, tighten the hold down straps by pulling on the strap buckles (L).

- The jaw slides (M) should not need to be adjusted.
- However, if you think the jaw slides need to be adjusted, obtain the measurements from your selling dealer.

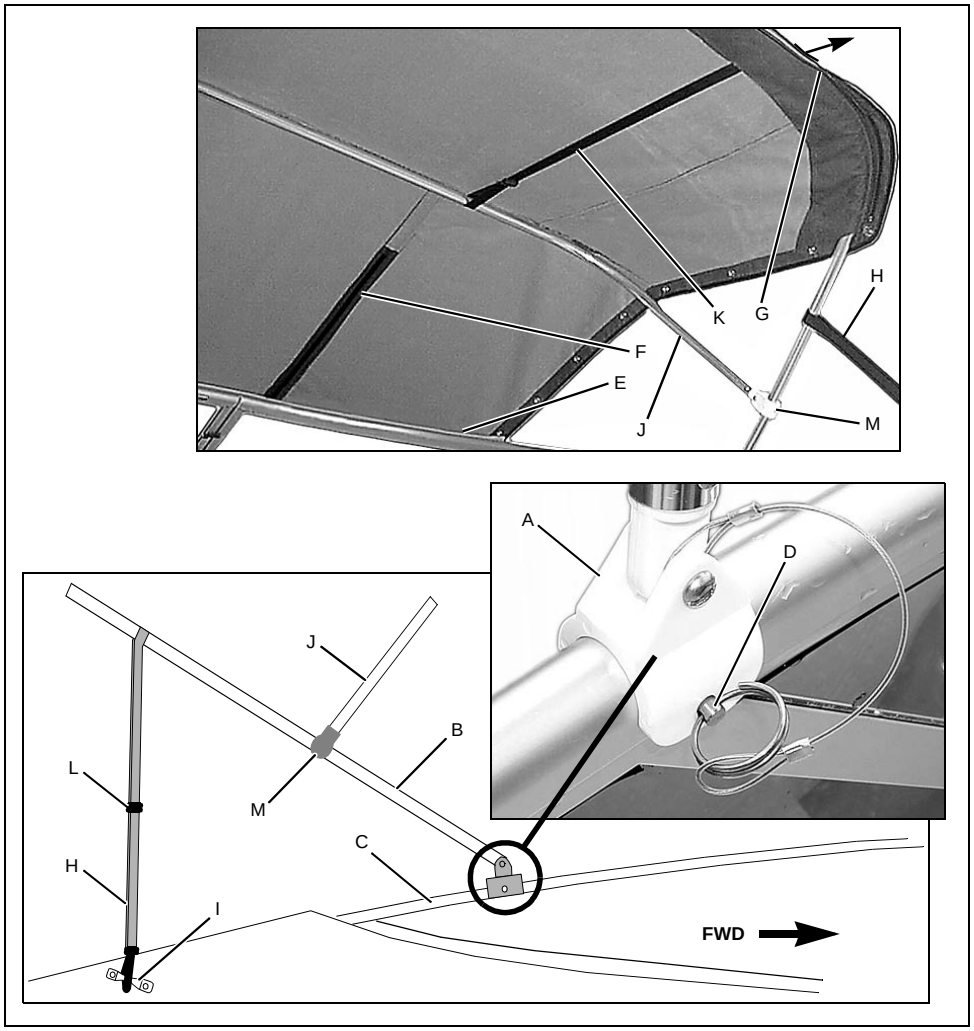

Installing the Bimini Top (If Equipped)

1. Slide the swivel ends (A) of the main bow (B) over the aft pre-drilled holes in the windshield frames (C) and insert the pins (D).
2. Pull the secondary bow (E) forward and slide the swivel ends of the forward legs (F) over the forward pre-drilled holes in the windshield frames and insert the pins.
3. Hook the hold down straps (G) to the deck loops (H).

- The jaw slides (I) should not need to be adjusted.
- However, if you think the jaw slides need to be adjusted, obtain the measurements from your selling dealer.

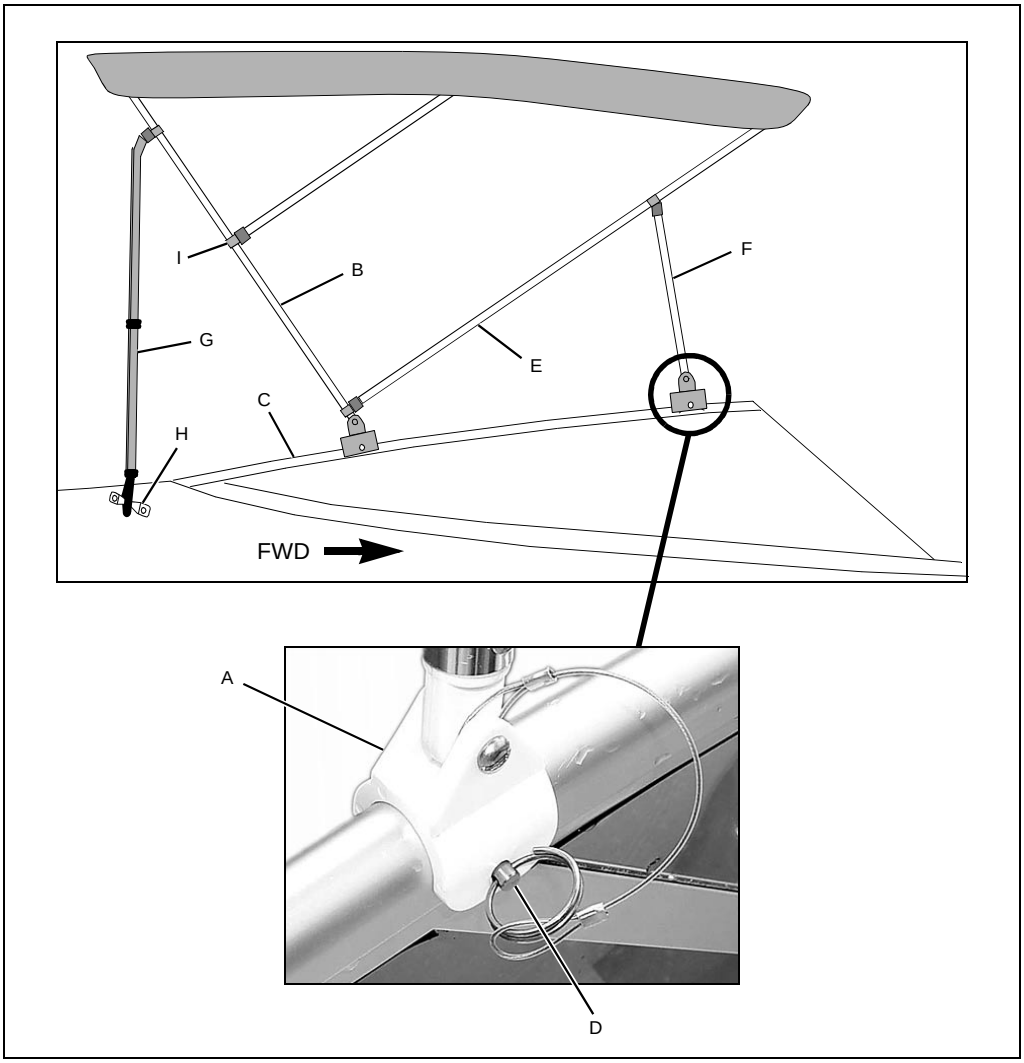

Chapter 9: Appliances & Entertainment Systems

Alcohol Stove (2400SC Only, If Equipped)

DANGER!

CARBON MONOXIDE POISONING HAZARD!

- **The alcohol stove is a source of dangerous carbon monoxide gas (CO).**
- **BEFORE using the alcohol stove, open doors and windows to make sure there is enough fresh air for ventilation.**

WARNING!

- **Open flame cooking appliances consume oxygen, this can cause asphyxiation or death.**
- **Maintain open ventilation.**

WARNING!

BURN/SCALDING and/or FIRE HAZARD!

- **Read the stove's instruction manual before using.**
- **Always keep an approved ABC-type fire extinguisher in galley area.**
- **Do not use the stove while underway.**
- **Any non-cooking devices on or near your stove during use are potential fire hazards!**
- **DO NOT touch burners, grates or nearby surfaces as they may be hot even when they are dark in color. Areas near burners and grates may become hot enough to cause burns.**
- **During and after use, do not touch or let clothing or other flammable material come in contact with heated units or areas near the units (burner tops, main frame sides and back, sea rails and pot holders) until they have had sufficient time to cool.**

Audio & Visual Equipment

NOTICE

AM radio reception may be impaired anytime the engine is running.

Read and understand the instruction manual for your boat's audio system before using.

Chapter 10: Convertible Seats, Beds, & Tables

Sleeper Seats (If Equipped)

- The sleeper seats can be adjusted fore and aft in the upright, operating position.
- The seat bottoms adjust into backrests when the seats are in the lounge position.

Operating Positions

To slide the seat forward:

1. Lift the forward seat at point (A).
2. Push down on the forward seat at point (B) and pull the seat forward.
3. Lock the forward seat into the desired position by pushing down at point (A).
4. Lift the aft seat at point (C).
5. Push down on the aft seat at point (D) and push the seat forward until the aft seat back is flush against the forward seat back.
6. Lock the aft seat into position by pushing down at point (C).

To slide the seat aft, repeat the steps above, but start with the aft seat.

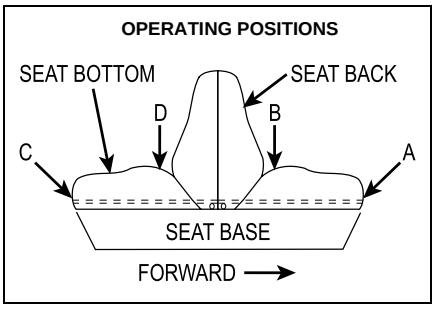

Lounge positions

To adjust into the flat lounge position:

1. Lift the forward seat at point (A).
2. Push down on the forward seat at point (B) and pull the seat forward until the seat back and bottom are flat.
3. Lift the aft seat at point (C).
4. Push down on the aft seat at point (D) and pull the seat aft until the seat back and bottom are flat.

To adjust into the chaise lounge position:

1. Lift up on the forward or aft seat bottom at point (A or C) and push the seat bottom down into the locked position.
2. To lower the seat bottom, lift the seat at point (A or C). Drop the seat bottom flat while holding the seat down at point (E).

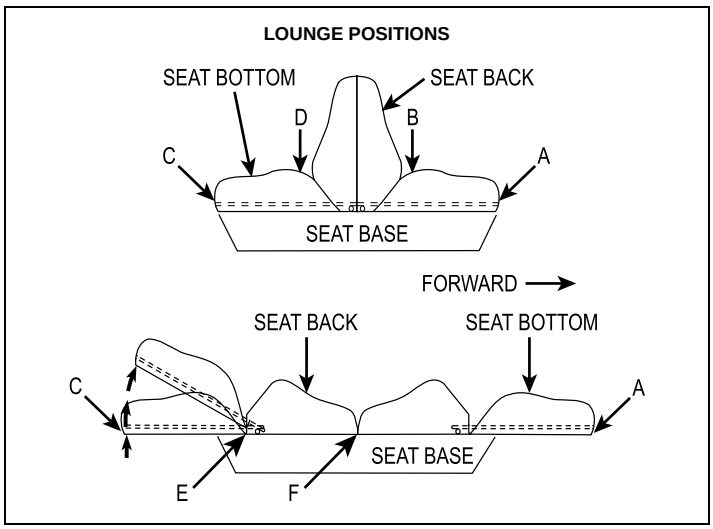

To return the seats to the operating position:

1. Lift the seat backs at point (F) and push down on the back edge of the seat bottom (B) and then seat bottom (D).
2. Push the seat bottoms towards the center of the seat until the seat backs are flush against each other and locked into place.

2400SC Dinette to V-Berth Conversion

1. Unfold the aft filler board support leg (A) and place the filler boards (B) securely on the velcro tabs (C).

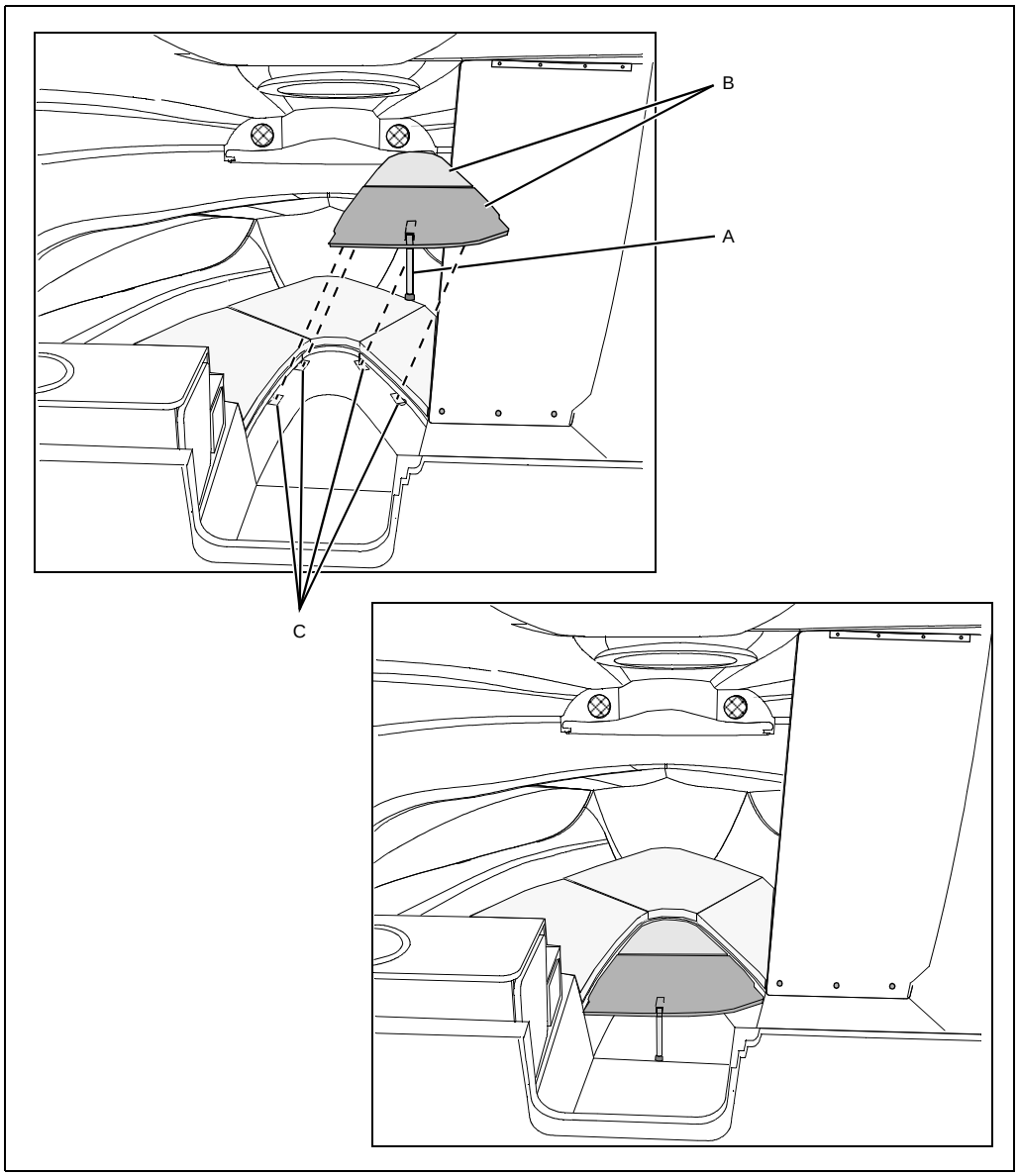

2. Place the filler cushion (D) on top of the filler boards.

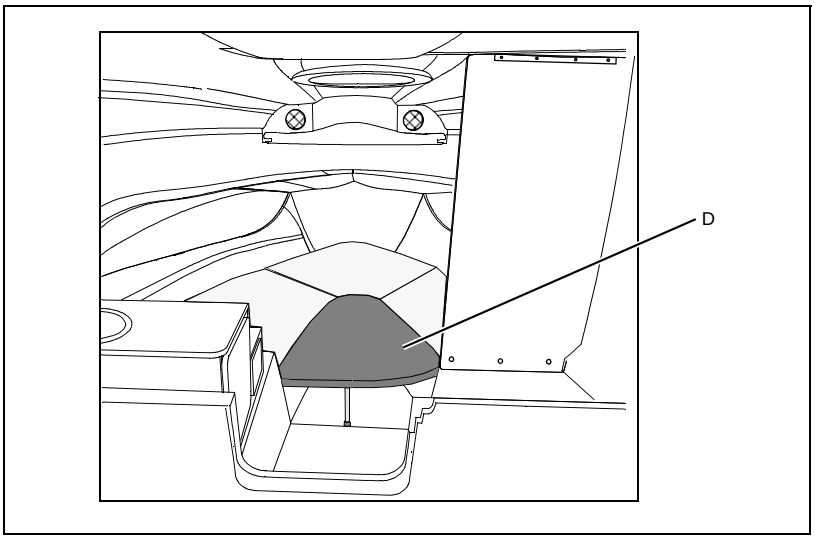

2400SR Bow Seating to Sunlounge Conversion

1. Place the filler boards (A) so they fit securely on the edge lips.

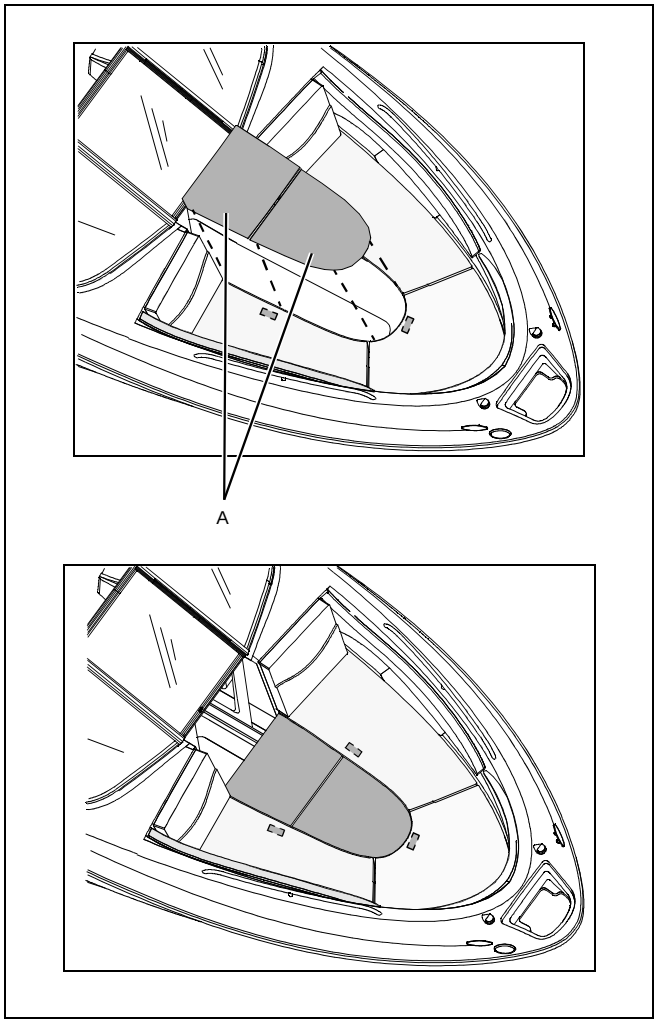

2. Place the filler cushions (B) on top of the filler boards.

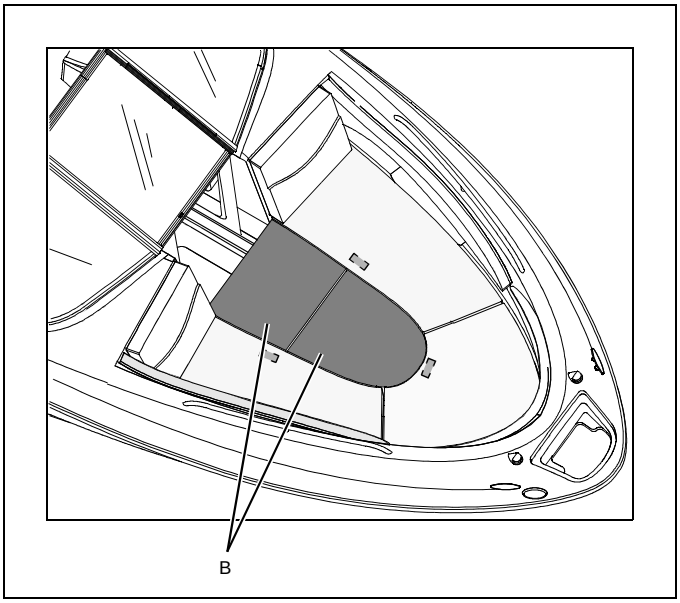

U-Lounge to Sunlounge Conversion (If Equipped)

1. Place the support leg (A) into the base (B) on the floor.

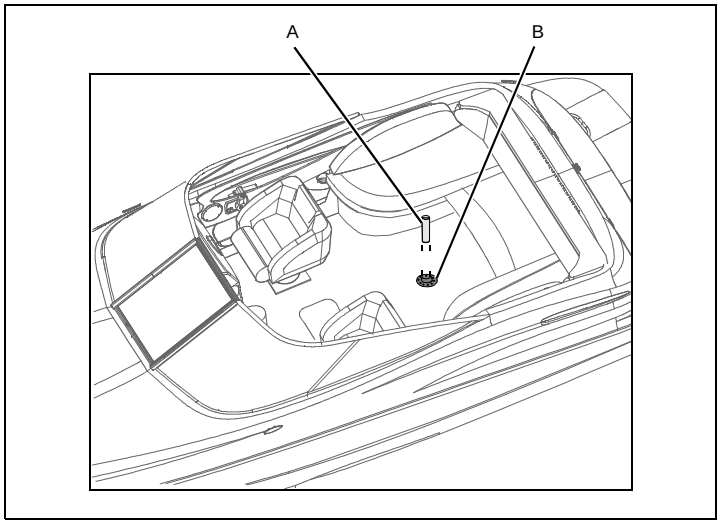

2. Place the filler board (C) on top of the support leg and make sure the velcro tabs (D) on the filler board line up with the velcro tabs on the edge lips.

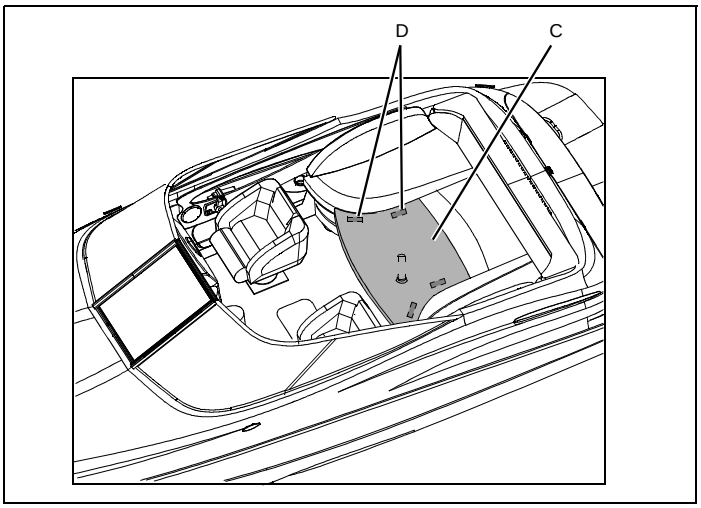

3. Place the filler cushion (E) on top of the filler board.

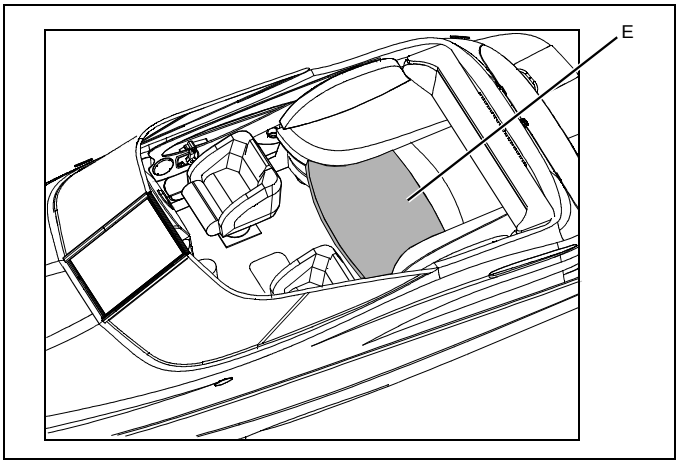

Chapter 11: Lights

⚠ CAUTION!

- **Be conservative in the use of battery power.**
- **If the engine is not running, prolonged use of the lights (overnight) will result in a drained battery.**

- The lights are powered by the boat's 12-volt DC system.

Care and Maintenance

All of the lights installed on your boat are of top quality, but you should be aware that failure may periodically occur for a variety of reasons:

1. There may be a blown fuse - *replace the fuse*.
2. The bulb may be burned out - *carry spare bulbs for replacement*.
3. A wire may be damaged or may have come loose - *repair as required*.
4. The bulb base may be corroded - *clean the base and coat it with non-conductive electrical lubricant*.

Navigation Lights

⚠ CAUTION!

Avoid the storage of gear where it would block navigation lights from view.

Read and understand the navigation light section of *Sport Boat Owner's Manual*.

Chapter 12: Electrical System

DANGER!

EXTREME FIRE, SHOCK & EXPLOSION HAZARD!

- **To minimize the risks of fire and explosion, NEVER install knife switches or other arcing devices in the fuel compartments.**
- **NEVER substitute automotive parts for marine parts. Electrical, ignition and fuel system parts were designed and manufactured to comply with rules and regulations that minimize risks of fire and explosion.**
- **DO NOT modify the electrical systems or relevant drawings.**
- **Have qualified personnel install batteries and/or perform electrical system maintenance.**
- **Make sure that all battery switches are turned OFF before performing any work in the engine spaces.**

WARNING!

FIRE & EXPLOSION HAZARD!

- **Fuel fumes are heavier than air and will collect in the bilge areas where they can be accidently ignited.**
- **Visually and by smell (sniff test), check the engine and fuel compartments for fumes or accumulation of fuel.**
- **ALWAYS run the bilge blowers for at least four minutes prior to engine starting, electrical system maintenance or activation of electrical devices.**
- **Minimize the danger of fire and explosion by not exposing the batteries to open flame or sparks. NEVER smoke anywhere near the batteries.**

CAUTION!

***SHOCK & ELECTRICAL SYSTEM DAMAGE HAZARD!* NEVER disconnect the battery cables while the engine is running since it can cause damage to your boat's electrical system components.**

NOTICE

Electrical connections are prone to corrosion. To reduce corrosion caused electrical problems, keep all electrical connections clean and apply a spray-on protectant that is designed to protect connections from corrosion.

12-Volt DC System

Battery

The battery supplies electricity for lights, accessories, engine starting.

The Electrical section of Chapter 8, in the *Sport Boat Owner's Manual*, provides battery, care and maintenance instructions.

Fuses and Circuit Breakers

- Fuses for the engine and main accessory power are on the fuse block behind the dash.
- Some equipment may have secondary fuse protection at the unit, behind the battery.
- Electronics power is provided at the helm station.

Alternator

The engine alternator will keep the batteries properly charged when running at cruising speeds.

12-Volt Accessory Outlet

⚠ CAUTION!

DO NOT use the 12-volt accessory outlet with a cigarette or cigar lighter. High temperatures may melt the outlet.

- Your boat is equipped with a 12-volt accessory outlet at the helm.
- The outlet can be used with any 12-volt device which draws 15 amps or less.
- The 12-volt accessory outlet is protected by a 15 amp circuit breaker on the main circuit breaker panel.

Battery Switch

- The Owner's Manual provides a general description of the battery switch function in the *Batteries* portion of the Electrical Section.

Electrical Routings

2400SC Deck Electrical Harness

NOTE: VIEWS ARE UNDERSIDE OF DECK

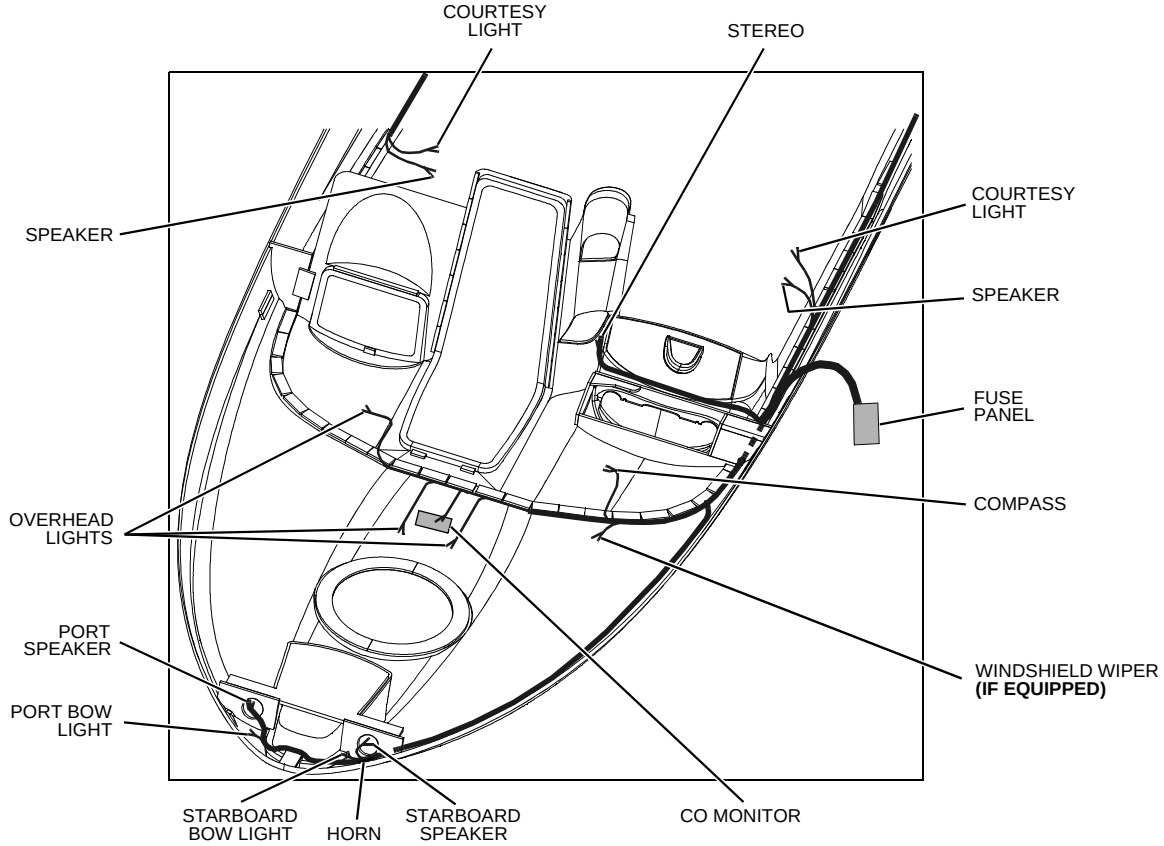

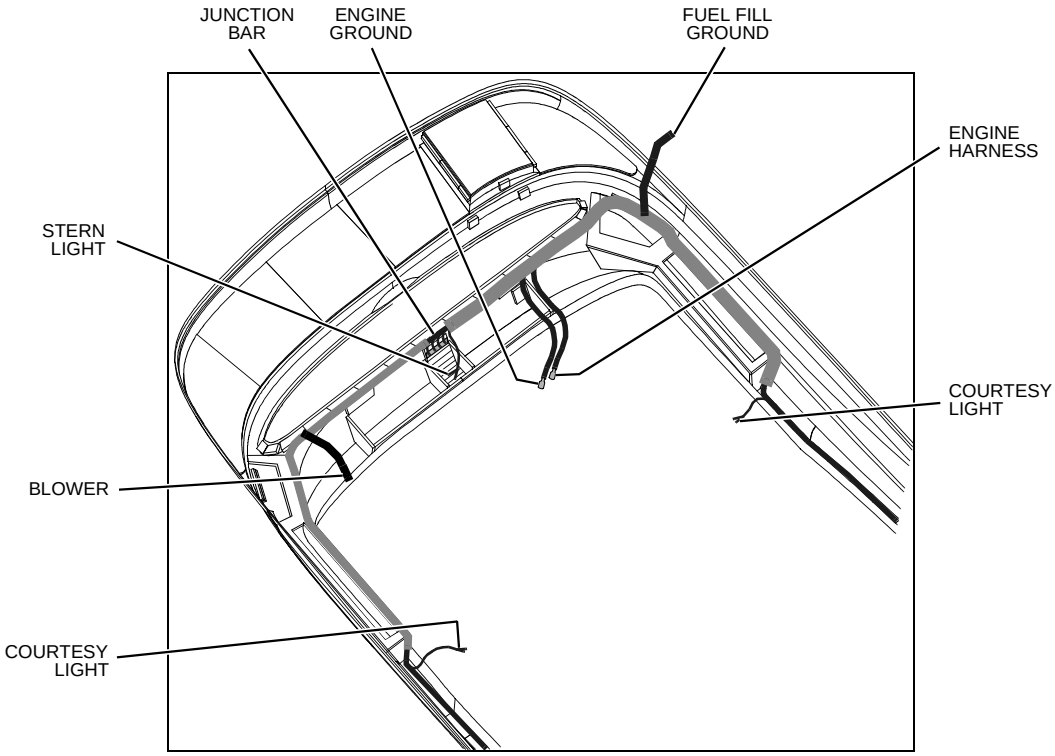

2400SR Deck Electrical Harness

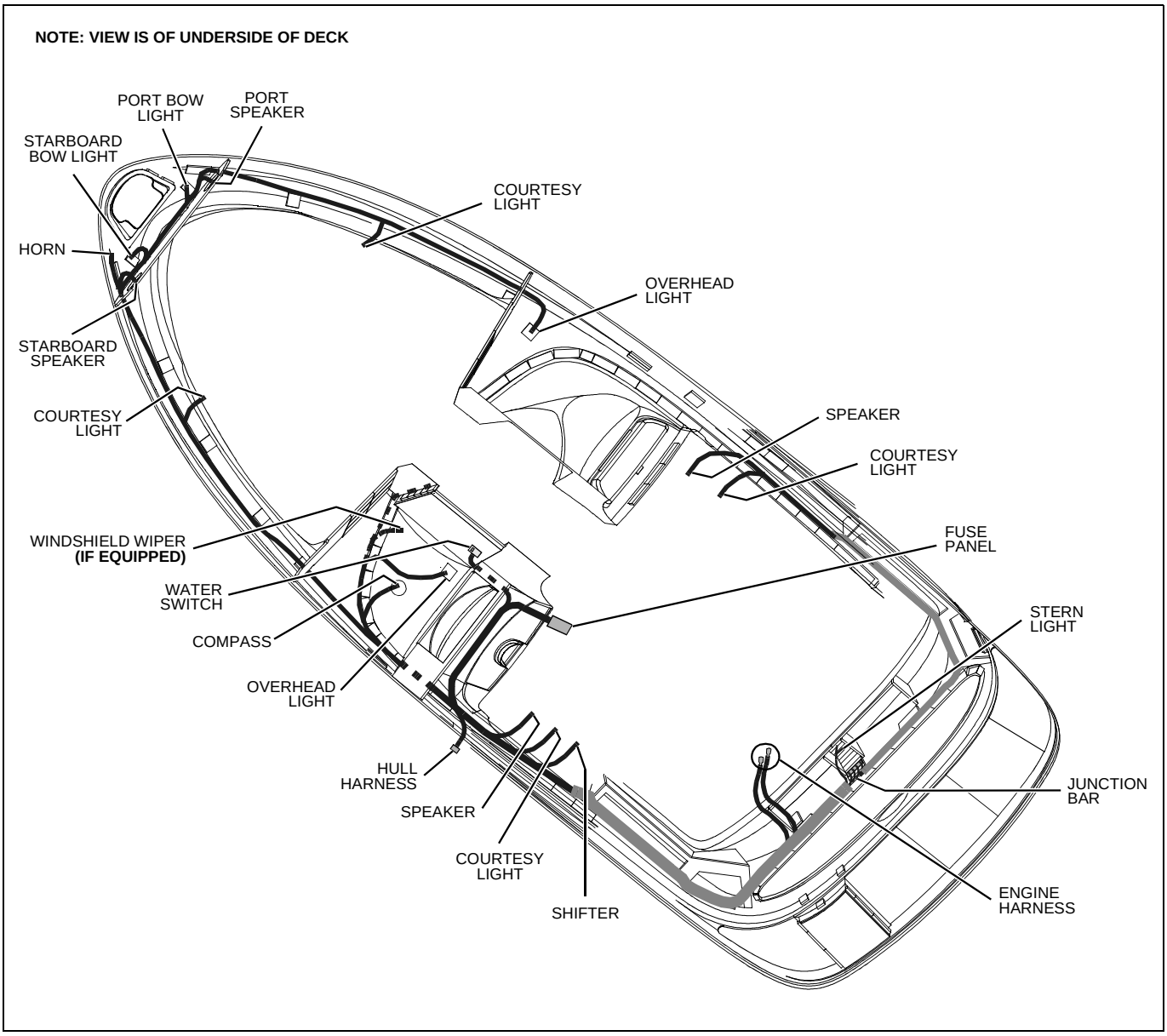

Hull Electrical Harness

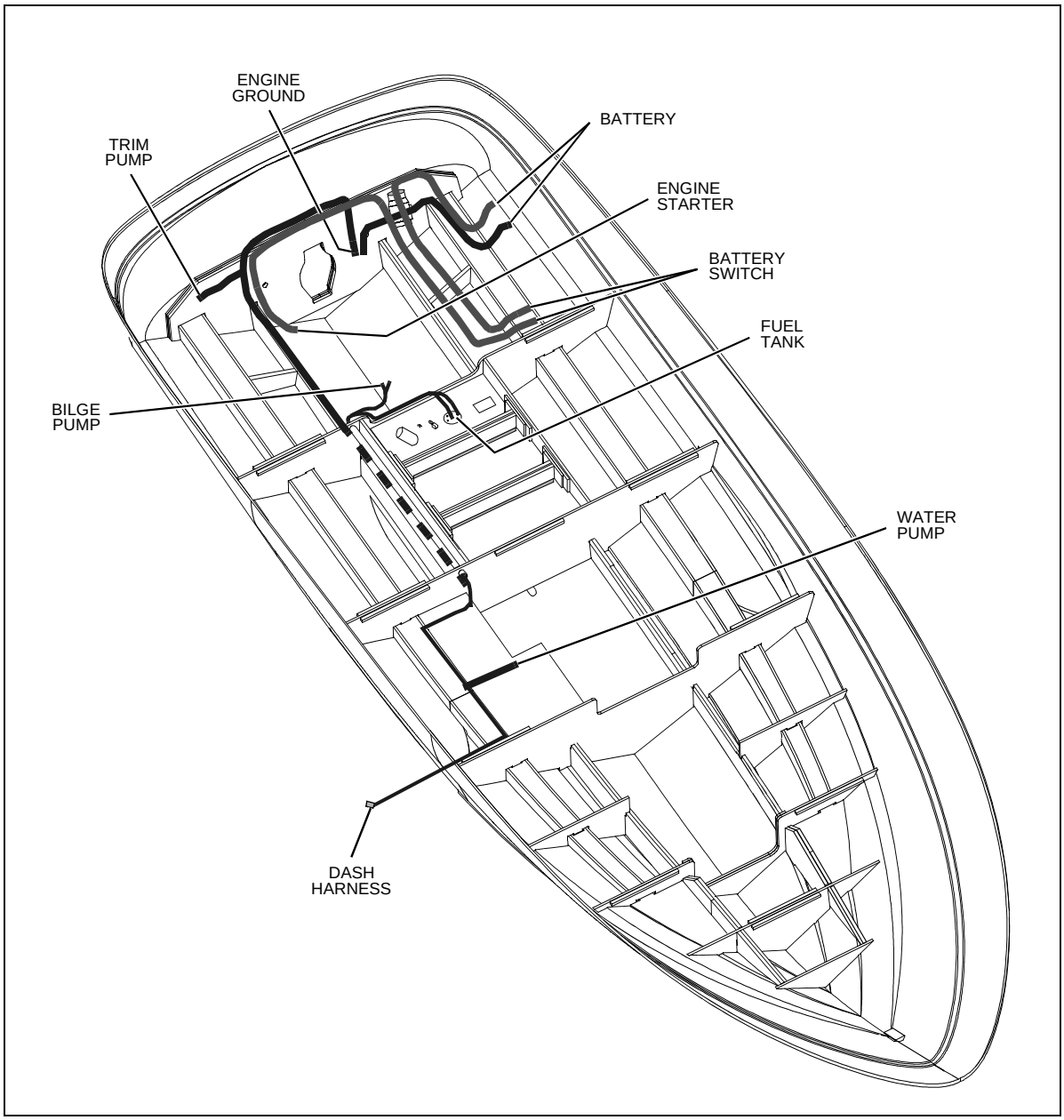

Wiring Diagram

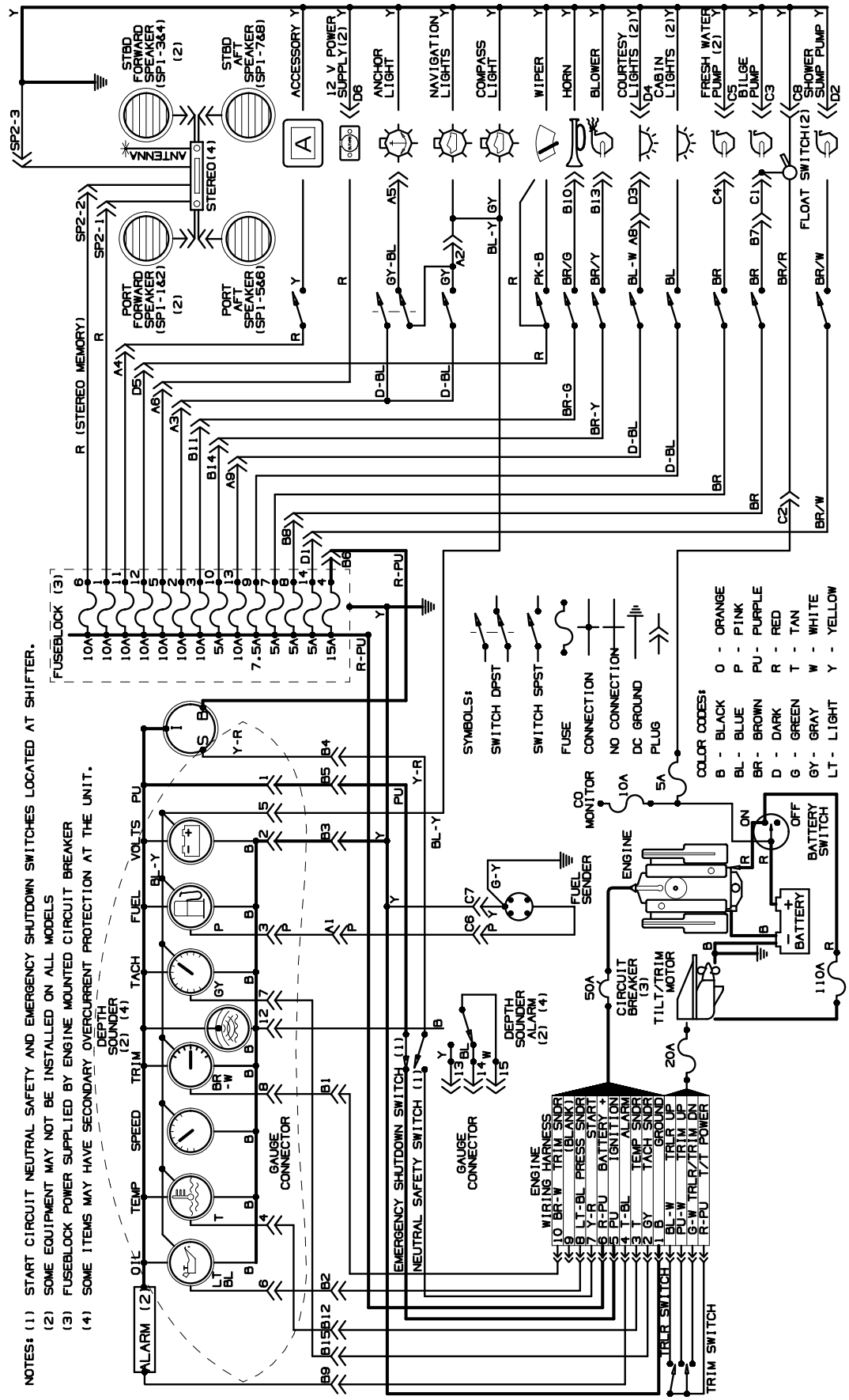

Important Records

Selling Dealer

Name Of Dealership

Address

Phone/FAX/E-mail

Sales Manager

Service Manager

Engine

Manufacturer | Model Name/Number

Engine Serial Number

Oil Type/SAE | Quarts per Engine | Filter Type

Propeller

Manufacturer | Pitch

Model Number

Key Numbers

Ignition | Other

Electronics

Manufacturer | Model Name/Number

Serial Number

Manufacturer | Model Name/Number

Serial Number

Manufacturer | Model Name/Number

Serial Number

Manufacturer | Model Name/Number

Serial Number

Float Plan

Before going boating, fill out a copy of this float plan (or similar) and leave it with a ***reliable*** person whom you can depend on to contact the Coast Guard or other rescue organization, if you do not return as scheduled.

Description of Boat

Registration/Documentation Number

Length | Make | Type

Hull Color | Trim Color

Fuel Capacity | Engine Type | Number of Engines

Distinguishing Features

Distinguishing Features

Operator of Boat

Full Name

Male or Female | Age | Health

Address

Address

Phone/FAX/E-mail

Operator's Experience

Persons on Board

Full Name

Age | Health | Phone Number

Full Name

Age | Health | Phone Number

Full Name

Age | Health | Phone Number

Full Name

Age | Health | Phone Number

Full Name

Age | Health | Phone Number

Full Name

Age | Health | Phone Number

Full Name

Age | Health | Phone Number

Survival Equipment

Marine Radio (Yes/No)	Type	Frequencies
Number of PFDs	Flares (Yes/No)	Mirror (yes or no)
Smoke Signals (Yes/No)	Flashlight (Yes/No)	Food (Yes/No)
Water (Yes/No)	Anchor (Yes/No)	Raft/Dinghy (Yes/No)
Paddles (Yes/No)	EPIRB (Yes/No)	Other
Other	Other	Other

Vehicle Description

Make	Model
Color	License Number

Where is the Vehicle Parked?

Trip Expectations

Departing From

Departure Date	Departure Time

Stopover 1

Arrive No Later Than: Date	Arrive No Later Than: Time

Stopover 2

Arrive No Later Than: Date	Arrive No Later Than: Time

Stopover 2

Arrive No Later Than: Date	Arrive No Later Than: Time

Stopover 2

Arrive No Later Than: Date	Arrive No Later Than: Time

Stopover 2

Arrive No Later Than: Date	Arrive No Later Than: Time

Stopover 2

Arrive No Later Than: Date	Arrive No Later Than: Time

Final Destination Port (If Different Than Home Port)

Arrive No Later Than: Date	Arrive No Later Than: Time

If not returned by the date and time listed above, call the Coast Guard or other local authority.

Coast Guard Phone Number

Local Authority Phone Number

Owner’s Notes

Owner’s Notes

Owner’s Notes

Owner’s Notes

Part Number 1744147

Maxum Marine • P.O. Box 9029 • Everett, WA 98206 • 360-435-5571